INTERNATIONAL STANDARD

ISO 14644-7

First edition
2004-10-01

Cleanrooms and associated controlled environments —

Part 7: Separative devices (clean air hoods, gloveboxes, isolators and mini-environments)

Salles propres et environnements maîtrisés apparentés —

Partie 7: Dispositifs séparatifs (postes à air propre, boîtes à gants, isolateurs et mini-environnements)

Reference number
ISO 14644-7:2004(E)

© ISO 2004

Copyright International Organization for Standardization
Provided by IHS Markit under license with ANSI
No reproduction or networking permitted without license from IHS

Licensee=Becton Dickinson - Loc 1 - 61, 64/5984713001, User=Chiu, Shelly
Not for Resale, 10/14/2019 19:24:11 MDT

PDF disclaimer

This PDF file may contain embedded typefaces. In accordance with Adobe's licensing policy, this file may be printed or viewed but shall not be edited unless the typefaces which are embedded are licensed to and installed on the computer performing the editing. In downloading this file, parties accept therein the responsibility of not infringing Adobe's licensing policy. The ISO Central Secretariat accepts no liability in this area.

Adobe is a trademark of Adobe Systems Incorporated.

Details of the software products used to create this PDF file can be found in the General Info relative to the file; the PDF-creation parameters were optimized for printing. Every care has been taken to ensure that the file is suitable for use by ISO member bodies. In the unlikely event that a problem relating to it is found, please inform the Central Secretariat at the address given below.

© ISO 2004

All rights reserved. Unless otherwise specified, no part of this publication may be reproduced or utilized in any form or by any means, electronic or mechanical, including photocopying and microfilm, without permission in writing from either ISO at the address below or ISO's member body in the country of the requester.

ISO copyright office
Case postale 56 • CH-1211 Geneva 20
Tel. + 41 22 749 01 11
Fax + 41 22 749 09 47
E-mail copyright@iso.org
Web www.iso.org

Published in Switzerland

--`,,,,`,,,,,`,`,`,,,,,``,`-`-`,,`,,`,`,,`---

Copyright International Organization for Standardization
Provided by IHS Markit under license with ANSI
No reproduction or networking permitted without license from IHS
Licensee=Becton Dickinson - Loc 1 - 61, 64/5984713001, User=Chiu, Shelly
Not for Resale, 10/14/2019 19:24:11 MDT

Contents

Page

Foreword ... iv
Introduction ... v
1 Scope ... 1
2 Normative references ... 1
3 Terms and definitions ... 2
4 Requirements ... 3
5 Design and construction ... 5
6 Access devices ... 6
6.1 Use ... 6
6.2 Manual operation ... 6
6.3 Robotic handling ... 7
7 Transfer devices ... 7
7.1 Use ... 7
7.2 Selection ... 7
7.3 Fail-safe design ... 7
8 Siting and installing ... 7
9 Testing and approval ... 8
9.1 General ... 8
9.2 Glove breach test ... 8
9.3 Operating differential pressure ... 8
9.4 Leak testing ... 8
9.5 Periodic testing ... 9
Annex A (informative) **Separation continuum concept** ... 10
Annex B (informative) **Air-handling systems and gas systems** ... 13
Annex C (informative) **Access devices** ... 16
Annex D (informative) **Examples of transfer devices** ... 22
Annex E (informative) **Leak testing** ... 31
Annex F (informative) **Parjo leak test method** ... 40
Bibliography ... 51

© ISO 2004 – All rights reserved

Copyright International Organization for Standardization
Provided by IHS Markit under license with ANSI
No reproduction or networking permitted without license from IHS
Licensee=Becton Dickinson - Loc 1 - 61, 64/5984713001, User=Chiu, Shelly
Not for Resale, 10/14/2019 19:24:11 MDT

Foreword

ISO (the International Organization for Standardization) is a worldwide federation of national standards bodies (ISO member bodies). The work of preparing International Standards is normally carried out through ISO technical committees. Each member body interested in a subject for which a technical committee has been established has the right to be represented on that committee. International organizations, governmental and non-governmental, in liaison with ISO, also take part in the work. ISO collaborates closely with the International Electrotechnical Commission (IEC) on all matters of electrotechnical standardization.

International Standards are drafted in accordance with the rules given in the ISO/IEC Directives, Part 2.

The main task of technical committees is to prepare International Standards. Draft International Standards adopted by the technical committees are circulated to the member bodies for voting. Publication as an International Standard requires approval by at least 75 % of the member bodies casting a vote.

Attention is drawn to the possibility that some of the elements of this document may be the subject of patent rights. ISO shall not be held responsible for identifying any or all such patent rights.

ISO 14644-7 was prepared by Technical Committee ISO/TC 209, *Cleanrooms and associated controlled environments*.

ISO 14644 consists of the following parts, under the general title *Cleanrooms and associated controlled environments*:

— *Part 1: Classification of air cleanliness*

— *Part 2: Specifications for testing and monitoring to prove continued compliance with ISO 14644-1*

— *Part 4: Design, construction and start-up*

— *Part 5: Operations*

— *Part 6: Vocabulary*

— *Part 7: Separative devices (clean air hoods, gloveboxes, isolators and mini-environments)*

The following parts are under preparation:

— *Part 3: Test methods*

— *Part 8: Classification of airborne molecular contamination*

© ISO 2004 – All rights reserved

Copyright International Organization for Standardization
Provided by IHS Markit under license with ANSI
No reproduction or networking permitted without license from IHS

Licensee=Becton Dickinson - Loc 1 - 61, 64/5984713001, User=Chiu, Shelly
Not for Resale, 10/14/2019 19:24:11 MDT

Introduction

In the spirit of the generic requirements of an International Standard, the term “separative devices” was developed by Technical Committee ISO/TC 209 to encompass the wide continuum of configurations from open unrestricted air overspill to wholly contained systems. Common terms-of-trade, such as clean air hoods, gloveboxes, isolators and mini-environments, have different meanings depending on the specific industry.

Difficulties experienced in the manufacture and handling of certain products or materials have driven the development of separative devices. These difficulties include product sensitivity to particles, chemicals, gases or microorganisms; operator sensitivity to the process materials or byproducts; and both product and operator sensitivity.

Separative devices provide assured protection in varying levels by utilising physical or dynamic barriers, or both, to create separation between operation and operator. Certain processes may require special atmospheres to prevent degradation or explosions. Some systems may be capable of providing 100 % recirculation of the contained atmosphere to allow inert gas operation or biodecontamination with reactive gases.

Usually people do not work directly inside the separative-device environment during production. These separative devices may be movable or fixed, and used for transport, transfer and process. The product or process, or both, are manipulated remotely with access devices either manually, with protection by barrier technology such as wall-integrated personal interface systems (e.g. gloves, gauntlets, half-suits), or mechanically with robotic handling systems.

Air cleanliness definitions and test methods covered in ISO 14644-1, 14644-2 and 14644-3 generally apply within separative devices. In applications with biological contamination requirements, ISO 14698-1 and 14698-2 will apply. However, some applications can have special requirements for monitoring because of extreme conditions that may be encountered. These unique conditions are covered in this part of ISO 14644.

Transfer devices to move material in and out of separative devices form an important portion of this part of ISO 14644. In addition, material can be moved from one fixed separative device to another in transport containers.

Design and construction of cleanrooms, including generic aspects of clean zones, are covered in ISO 14644-4. ISO 14644-4:2001, Figure A.4, illustrates aerodynamic measures or air overspill often used in industry-specific separative devices called clean air hoods and mini-environments. Mini-environments are often used in the electronics industry with transport containers, called boxes or pods, to provide very clean process conditions. The application of barrier technology used in industry-specific separative devices called isolators is shown in ISO 14644-4:2001, Figure A.5. Separative devices, often called gloveboxes, containment enclosures or isolators, are used in the medical products and nuclear industries to provide protection to the operator as well as the process. Isolators may be rigid- or soft-walled depending on the application. The Bibliography contains industry-specific references. However, from a unifying conceptual standpoint, a continuum of separation exists between the operation and the operator, ranging from totally open to totally enclosed systems depending on the application. Similarly, a continuum exists for containment.

The concept of separative devices is not limited to one specific industry, as many industries use these technologies for different requirements. In that light, this part of ISO 14644 provides a generic overview of the requirements involved.

© ISO 2004 – All rights reserved

Copyright International Organization for Standardization
Provided by IHS Markit under license with ANSI
No reproduction or networking permitted without license from IHS
Licensee=Becton Dickinson - Loc 1 - 61, 64/5984713001, User=Chiu, Shelly
Not for Resale, 10/14/2019 19:24:11 MDT

--`,,,,`,,,,,`,`,`,,,,,```,`-`-`,,`,,`,`,,`---

Copyright International Organization for Standardization
Provided by IHS Markit under license with ANSI
No reproduction or networking permitted without license from IHS

Licensee=Becton Dickinson - Loc 1 - 61, 64/5984713001, User=Chiu, Shelly
Not for Resale, 10/14/2019 19:24:11 MDT

Cleanrooms and associated controlled environments —

Part 7: Separative devices (clean air hoods, gloveboxes, isolators and mini-environments)

1 Scope

This part of ISO 14644 specifies the minimum requirements for the design, construction, installation, test and approval of separative devices, in those respects where they differ from cleanrooms as described in ISO 14644-4 and 14644-5.

The application of this part of ISO 14644 takes into account the following limitations.

— User requirements are as agreed by customer and supplier.

— Application-specific requirements are not addressed.

— Specific processes to be accommodated in the separative-device installation are not specified.

— Fire, safety and other regulatory matters are not considered specifically; where appropriate, national and local regulations apply.

This part of ISO 14644 is not applicable to full-suits.

2 Normative references

The following referenced documents are indispensable for the application of this document. For dated references, only the edition cited applies. For undated references, the latest edition of the referenced document (including any amendments) applies.

ISO 10648-2:1994, *Containment enclosures — Part 2: Classification according to leak tightness and associated checking methods*

ISO 14644-1:1999, *Cleanrooms and associated controlled environments — Part 1: Classification of air cleanliness*

ISO 14644-2:2000, *Cleanrooms and associated controlled environments — Part 2: Specifications for testing and monitoring to prove continued compliance with ISO 14644-1*

ISO 14644-3:—[1)], *Cleanrooms and associated controlled environments — Part 3: Test methods*

ISO 14644-4:2001, *Cleanrooms and associated controlled environments — Part 4: Design, construction and start-up*

1) To be published.

© ISO 2004 – All rights reserved

Copyright International Organization for Standardization
Provided by IHS Markit under license with ANSI
No reproduction or networking permitted without license from IHS
Licensee=Becton Dickinson - Loc 1 - 61, 64/5984713001, User=Chiu, Shelly
Not for Resale, 10/14/2019 19:24:11 MDT

ISO 14698-1, *Cleanrooms and associated controlled environments — Part 1: Biocontamination control — General principles and methods*

ISO 14698-2, *Cleanrooms and associated controlled environments — Part 2: Biocontamination control — Evaluation and interpretation of biocontamination data*

3 Terms and definitions

For the purposes of this document, the terms and definitions given in ISO 14644-1, 14644-2, 14644-4 and the following apply.

3.1
access device
device for manipulation of processes, tools or products within the separative device

3.2
action level
level set by the user in the context of controlled environments, which, when exceeded, requires immediate intervention, including the investigation of cause, and corrective action

3.3
alert level
level set by the user in the context of controlled environments, giving early warning of a drift from normal conditions, which, when exceeded, should result in increased attention to the process

3.4
barrier
means employed to provide separation

3.5
breach velocity
velocity through an aperture sufficient to prevent movement of matter in the direction opposite to the flow

3.6
containment
state achieved by separative devices with high degree of separation between operator and operation

3.7
decontamination
reduction of unwanted matter to a defined level

3.8
gauntlet
one-piece glove covering the full arm-length

3.9
glove
⟨of separative devices⟩ component of an access device that maintains an effective barrier while enabling the hands of the operator to enter the enclosed volume of an separative device

3.10
glove port
attachment site for gloves, sleeves and gauntlets

3.11
glove sleeve system
multi-component access device that maintains an effective barrier while enabling replacement of the sleeve piece, connecting cuff piece and glove

© ISO 2004 – All rights reserved
Copyright International Organization for Standardization
Provided by IHS Markit under license with ANSI
No reproduction or networking permitted without license from IHS
Licensee=Becton Dickinson - Loc 1 - 61, 64/5984713001, User=Chiu, Shelly
Not for Resale, 10/14/2019 19:24:11 MDT

3.12
half-suit
access device that maintains an effective barrier while enabling the head, trunk and arms of the operator to enter the working space of the separative device

3.13
hourly leak rate
R_h
ratio of the hourly leakage q of the containment enclosure under normal working conditions (pressure and temperature) to the volume V of the said containment enclosure

NOTE It is expressed in reciprocal hours (h^{-1}).

[ISO 10648-2:1994]

3.14
leak
⟨of separative devices⟩ defect revealed by testing under a pressure differential after corrections for atmospheric conditions

3.15
pressure integrity
capability to provide a quantifiable pressure leakage rate repeatable under test conditions

3.16
separation descriptor
$[A_a:B_b]$
numerical abbreviation summarizing the difference in cleanliness classification between two areas as ensured by a separative device under specified test conditions, where

A is the ISO class inside the device;

a is the particle size at which A is measured;

B is the ISO class outside the device;

b is the particle size at which B is measured

3.17
separative device
equipment utilizing constructional and dynamic means to create assured levels of separation between the inside and outside of a defined volume

NOTE Some industry-specific examples of separative devices are clean air hoods, containment enclosures, gloveboxes, isolators and mini-environments.

3.18
transfer device
mechanism to effect movement of material into or out of separative devices while minimizing ingress or egress of unwanted matter

4 Requirements

The following information shall be defined, agreed and documented between customer and supplier:

a) number, date of publication, and edition of this part of ISO 14644;

b) established role of other relevant parties to the project (e.g. consultants, designers, regulatory authorities, service organizations);

--`,,,,`,,,,,`,`,`,,,,,`,`,`,`-`-`,,`,,`,`,,`---

© ISO 2004 – All rights reserved

Copyright International Organization for Standardization
Provided by IHS Markit under license with ANSI
No reproduction or networking permitted without license from IHS
Licensee=Becton Dickinson - Loc 1 - 61, 64/5984713001, User=Chiu, Shelly
Not for Resale, 10/14/2019 19:24:11 MDT

c) intended general purpose of equipment, planned operations and any constraint imposed by the operating requirements such as material compatibility, residues and effluents;

d) reliability and availability;

e) when appropriate, any applicable hazard analysis;

NOTE HACCP, HAZOP, FMEA, FTA methods or similar [23] have been found to be suitable;

f) required airborne particulate cleanliness class or demands for cleanliness in accordance with ISO 14644-1 and 14644-2. Where appropriate, airborne molecular contamination should be considered [18] [19];

g) specified operational states (e.g. as-built, at-rest, operational) (see ISO 14644-1) and recovery time (e.g. maintenance, cleaning, etc.);

h) where appropriate, a specified separation descriptor [25];

i) if devices depend on differential pressure, the differential pressure shall be continuously monitored and alarmed in some applications;

j) where appropriate, a specified hourly leak rate (for an example of methodology, see Annex E);

k) other operational parameters, including

1) test points,

2) alert and action levels to be measured to ensure compliance,

3) test methods;

l) contamination-control concept, including the establishment of installation, operation and performance criteria;

m) required methods of measurement, sample locations, control, monitoring and documentation;

n) mode of entry or exit of separative devices and related equipment, apparatus, supplies and personnel into the controlled environment required during

1) installation,

2) commissioning,

3) operation,

4) maintenance;

o) layout and configuration of the installation;

p) critical dimensions, mass and weight restrictions, including those related to available space;

q) process requirements that affect the installation;

r) process equipment list with utility requirements;

s) maintenance requirements of the installation;

t) responsibilities for the preparation, approval, execution, supervision, documentation, statement of criteria, basis of design, construction, testing, training, commissioning and qualification, including performance, witnessing, and reporting of tests;

u) identification and assessment of external environmental influences;

v) additional information required by the particular application and requirements in Clauses 5, 6, 7 and 8 of this part of ISO 14644;

w) compliance with local regulations.

--`,,,,`,,,,,`,`,`,,,,,``,,`,`-`-`,,`,,`,`,,`---

© ISO 2004 – All rights reserved
Copyright International Organization for Standardization
Provided by IHS Markit under license with ANSI
No reproduction or networking permitted without license from IHS
Licensee=Becton Dickinson - Loc 1 - 61, 64/5984713001, User=Chiu, Shelly
Not for Resale, 10/14/2019 19:24:11 MDT

5 Design and construction

5.1 Design shall include capability to support qualification and to comply with regulatory requirements.

5.2 Separative-device design shall provide the process, the operator or third party with protection against contamination appropriate to the operation being performed.

5.3 Consideration shall be given to separation means (see Annex A). The separation descriptor, where applicable, shall be taken into account.

The risk of concentrated leaks should be addressed.

5.4 Consideration shall be given to malfunction, procedures and ancillary systems involved with the separative-device application (see Annex B).

5.5 Consideration shall be given to access devices and transfer devices (see Annexes C and D).

5.6 Separative devices shall be ergonomically designed for easy access to all internal surfaces and work areas, and with respect to the process undertaken.

5.7 Access devices shall be of the minimum size and number consistent with operation, cleaning and maintenance. (See Clause 6.)

5.8 Consideration shall be given to differential operating pressure, including excursions.

5.9 Hourly leak rate, when applicable, shall be taken into account (see Annex A). The rigidity or flexibility of the separative device shall be taken into account if quantified leak rates are required.

5.10 External influences, such as air flow, vibration and pressure differences, shall be considered to avoid adverse effects on integrity and function.

5.11 Where appropriate, hazard analysis shall be performed [see 4 e)].

5.12 Provision for cleaning or decontamination, including possible disposal of the device or its components, shall form part of the design criteria.

5.13 Built-in test facilities and appropriate alarms shall be included.

5.14 Transfer device(s) shall be appropriate to process and routine operation.

5.15 Filtration shall be appropriate for application.

5.16 Volumetric flow rate shall be appropriate for application.

5.17 Exhaust effluents shall undergo treatment where appropriate.

5.18 Whenever possible, items requiring maintenance shall be external to the separative device.

5.19 Materials used in the construction of separative devices, including sealing materials, fans, ventilation systems, piping and associated fittings, shall be chemically and mechanically compatible with the intended processes, process materials, application and decontamination methods. Protection against corrosion and degradation during prolonged use shall be considered. Heat and fire resistant construction materials shall be considered when appropriate (see Annex B). Where appropriate, materials used shall be checked for thermal characteristics, sorption and out gassing properties. Materials selected for viewing panels shall be tested and proven to remain transparent and resistant to changes that would prevent clear visibility.

--`,,,,`,,,,,`-`-`,,,,,``,`-`-`,,`,,`,`,,`---

© ISO 2004 – All rights reserved

Copyright International Organization for Standardization
Provided by IHS Markit under license with ANSI
No reproduction or networking permitted without license from IHS
Licensee=Becton Dickinson - Loc 1 - 61, 64/5984713001, User=Chiu, Shelly
Not for Resale, 10/14/2019 19:24:11 MDT

6 Access devices

6.1 Use

Access devices are used to manipulate processes, products or tools within the separative device. Manipulation is achieved by manual operation or robotic handling.

6.2 Manual operation

6.2.1 Devices for manual operation

Operator manual-manipulation devices consist of

a) gauntlets,

b) glove systems (e.g. sleeve, cuff-ring and glove),

c) half-suits and similar devices that allow extended reach,

d) remote manipulator.

Where full-suits are used, reference should be made to appropriate standards.

Where possible, consideration should be given to alternative manipulation devices that minimize the number of holes pierced through the structure of the separative device.

6.2.2 Gauntlets, glove systems, half-suits

6.2.2.1 When using gauntlets, glove systems and half-suits, these types of flexible-membrane access device systems shall be designed and constructed to allow for glove change without breaching the separative device (see Annex C). These systems are unlikely to maintain molecular containment, therefore alternative systems should be considered for applications requiring molecular containment.

6.2.2.2 Glove ports and glove cuff rings devices shall be designed for ease of change, integrity testing and security of operation.

6.2.2.3 The following selection criteria shall be considered in choosing gauntlet, glove sleeve and half-suit system materials that are vital in maintaining separation:

a) materials and tools to be handled within the separative device;

b) temperature limitations of the glove materials;

c) acceptable permeability;

d) chemical resistance or mechanical strength, or both;

e) sorption and desorption of chemicals;

f) known shelf and service lives of glove material;

g) differential pressures, including transient excursions (operating and abnormal pressures);

h) operations to be performed.

© ISO 2004 – All rights reserved
Copyright International Organization for Standardization
Provided by IHS Markit under license with ANSI
No reproduction or networking permitted without license from IHS
Licensee=Becton Dickinson - Loc 1 - 61, 64/5984713001, User=Chiu, Shelly
Not for Resale, 10/14/2019 19:24:11 MDT

6.2.3 Remote manipulation

Remote-handling systems consist of mechanical or servo links between an operator's hands and arms to a mechanical manipulation system within separative devices designed for specific applications.

6.3 Robotic handling

Robotic handling consists of automated systems designed to manipulate materials in a separative device following a process sequence for specific applications.

7 Transfer devices

7.1 Use

Transfer devices shall not diminish the performance of separative devices. In specific applications, transfer devices become critical in maintaining integrity of the device or process. Some transfer devices are used as independent separative devices.

7.2 Selection

Selection of a transfer device shall be based on the level of separation required by the application. The hourly leak rate of the transfer device shall not be greater than the hourly leak rate of the separative device which the transfer device serves. Transfer devices shall minimize the transfer of unwanted matter. Outline diagrams and descriptions of possible types of transfer device are included in Annex D. These diagrams are only illustrative examples of possible configurations.

7.3 Fail-safe design

In the event of power failure, transfer devices that have electrical interlocking mechanisms shall prevent access via the transfer device.

8 Siting and installing

8.1 The cleanroom classification of the room housing the separative device depends on the application, the design, and the operational capability of the separative device. Reference should be made to ISO 14644-4.

8.2 The appropriateness of the following points shall be considered:

a) air classification of the room (ISO 14644-1);

b) operational ergonomics;

c) maintenance;

d) toxicity of materials;

e) all process hazards;

f) byproduct hazards;

g) potential cross-contamination;

h) disposal matters;

i) any mandatory regulatory requirements.

--`,,,,`,,,,,`,`,`,,,,,`,,`,`,`,,`---

© ISO 2004 – All rights reserved

Copyright International Organization for Standardization
Provided by IHS Markit under license with ANSI
No reproduction or networking permitted without license from IHS
Licensee=Becton Dickinson - Loc 1 - 61, 64/5984713001, User=Chiu, Shelly
Not for Resale, 10/14/2019 19:24:11 MDT

9 Testing and approval

9.1 General

9.1.1 Selection of test procedures depends upon location, design, configuration and application of the separative device.

9.1.2 If air supply and exhaust systems are an integral part of the separative device, these systems shall also be tested.

9.1.3 In some situations, the air cleanliness in the separative device is not measurable by ISO 14644-1. Therefore alternative test procedures are required.

EXAMPLE 1 Testing of molecular contamination [18] [19].

EXAMPLE 2 Testing by particle surface contamination [30].

9.1.4 Certain conditions or operational states (e.g. dusty materials, out-gassing materials, or both types of materials) may not permit particulate sampling during operations or would present a hazard. Alternative states (e.g. before and after operations, but still in the operational state) may need to be sampled to determine the possibility of intrinsic contamination.

9.1.5 In the case of small-volume separative devices, a risk exists that pressure integrity and particle/aero-biocontamination counts are affected by the sample airflow rate of the air sampling instrument, if the sample airflow rate of the instrument is similar to the airflow rate of the separative device.

9.1.6 Appropriate test parameters shall be agreed between customer and supplier.

9.1.7 Separative device and auxiliary equipment testing and approval shall generally be performed with reference to ISO 14644-1, 14644-2, 14644-3, and 14644-4. Guidance is given in the annexes in this part of ISO 14644.

9.2 Glove breach test

When appropriate, the airflow through one open glove port shall be measured by placing an anemometer at the centre of the glove port. The velocity shall be agreed between customer and supplier (guidance value: 0,5 m/s).

9.3 Operating differential pressure

9.3.1 The differential pressure shall be tested in the at-rest and operational states.

9.3.2 When devices depend on differential pressure, the differential pressure should be continuously monitored and alarmed.

9.4 Leak testing

9.4.1 When appropriate, a leak test shall be performed. Guidance is given in Annexes E and F.

NOTE Integrity testing on some separative devices that operate close to atmosphere pressure (less than 1 000 Pa) requires detailed procedures and sensitive test equipment to establish a quantifiable leak rate. The resulting leak determines acceptability for the intended application (see Annex A).

9.4.2 When appropriate, an induction leak test shall be performed. Guidance is given in Annex E.

NOTE Induction leaks can occur when the velocity across an orifice creates a pressure depression and induces a reverse flow through the orifice (Venturi effect). Devices that operate at low differential pressures may be compromised by induction leakage. Similarly, devices that utilise over pressure or flow to minimise or prevent the transfer of unwanted matter may be at risk from induction leakage when operating under transient volume changes such as glove entry or withdrawal.

© ISO 2004 – All rights reserved

Copyright International Organization for Standardization
Provided by IHS Markit under license with ANSI
No reproduction or networking permitted without license from IHS

Licensee=Becton Dickinson - Loc 1 - 61, 64/5984713001, User=Chiu, Shelly
Not for Resale, 10/14/2019 19:24:11 MDT

9.5 Periodic testing

9.5.1 Testing shall be conducted in accordance with 9.5.2 and 9.5.3 and ISO 14644-1, ISO 14644-2, ISO 14698-1 and ISO 14698-2.

9.5.2 The tests and checks are a function of the application and instrumentation/detection systems. Routine tests shall be established and recorded for comparison preventative maintenance requirements.

9.5.3 The following recommendations for testing are given:

a) half-suit/glove testing

   1) on commissioning,

   2) prior to and after completion of work,

   3) after glove/glove sleeve changes;

b) pressure testing

   1) on commissioning,

   2) after any airflow or filter-pressure parameter changes,

   3) after maintenance affecting the separative device envelope or pressure control devices;

c) induction testing on commissioning;

d) instrumentation and alarm system testing

   1) on commissioning,

   2) after maintenance affecting the control system,

   3) at the frequency dictated by the instrumentation manufacturer,

   4) at predetermined periods consistent with use and operational requirements.

© ISO 2004 – All rights reserved

Copyright International Organization for Standardization
Provided by IHS Markit under license with ANSI
No reproduction or networking permitted without license from IHS
Licensee=Becton Dickinson - Loc 1 - 61, 64/5984713001, User=Chiu, Shelly
Not for Resale, 10/14/2019 19:24:11 MDT

Annex A
(informative)

Separation continuum concept

A separative device utilises physical means, aerodynamic means, or both, to create improved levels of separation between the inside and outside of a defined volume. Physical separation means include both rigid and flexible barriers. Aerodynamic means include air/gas flow with or without filtration. Generally, the assurance of maintaining separation increases with the degree of rigidity of the physical separation, as shown schematically in Figure A.1. Examples of common types of separative device for a variety of applications are given in Table A.1. However, it must be emphasised that there is not a direct relationship between airborne particulate cleanliness class, as defined in ISO 14644-1, and the position of a separative device in the separation continuum. Two measures of this separation are the separation descriptor and the hourly leak rate (pressure integrity). The separation descriptor [A_a:B_b] is a convenient measure when the hourly leak rate is not appropriate [25]. A four-level classification system of hourly leak rate (R_h) is given in ISO 10648-2. ISO 10648-2 classification is generally applied to devices with rigid physical barriers. It is acknowledged that overlap exists with ISO 14644-4, particularly with the first three items of the Figure A.1.

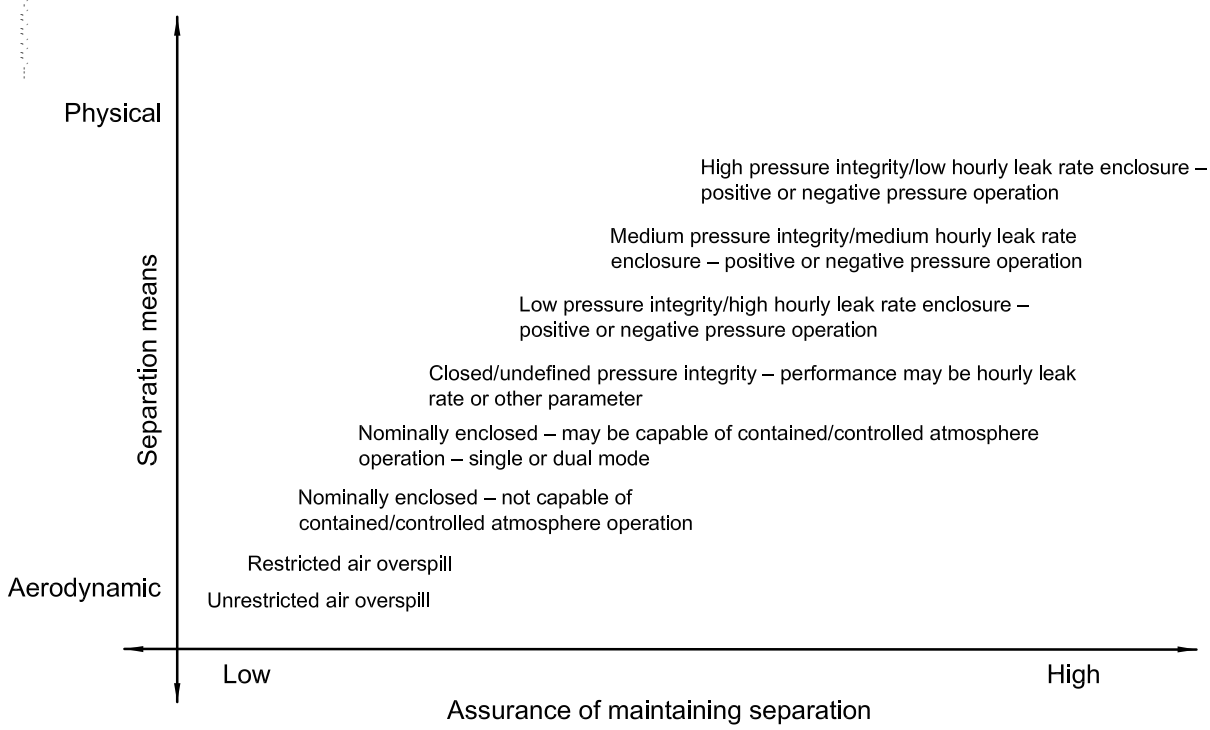

Figure A.1 — Schematic of the separation continuum illustrating increasing assurance of maintaining separation as the separation ranges from aerodynamic to physical means with overlapping separation approaches as a parameter

© ISO 2004 – All rights reserved
Copyright International Organization for Standardization
Provided by IHS Markit under license with ANSI
No reproduction or networking permitted without license from IHS
Licensee=Becton Dickinson - Loc 1 - 61, 64/5984713001, User=Chiu, Shelly
Not for Resale, 10/14/2019 19:24:11 MDT

Table A.1 — Separation continuum

Separation approaches	Means	Device descriptor	Examples of terms in common usage and synonyms
Unrestricted air overspill	Aerodynamic measures and filtration	Open — no curtains or screens. Operator equipped with normal cleanroom garments and gloves may reach into device for access and transfer. Clean zone is at positive pressure.	Clean air device, laminar flow hood, clean air hood
Restricted air overspill	Aerodynamic and physical	Access severely restricted by curtains or fixed screens.	Laminar-flow hood, clean air hood, directed air hood, clean work station
Nominally enclosed — not capable of contained/ controlled atmosphere operation	Aerodynamic and physical	Nominally enclosed; may incorporate access devices and transfer devices.	Point-of-fill device, filling tunnel
Nominally enclosed — may be capable of contained/controlled atmosphere operation — single or dual mode	Aerodynamic and physical	Large degree of physical separation in design. May be capable of controlled/ contained atmosphere operation.	Filling tunnel, point-of-fill device, laminar-flow tunnel, clean tunnel, sterilising oven, mini-environments for electronics
Closed/undefined pressure integrity — performance may be hourly leak rate or other parameter	Physical	Closed devices with undefined integrity. May have flexible film walls.	Isolators, glove bags, powder transfer control or hopper, flexible film/half-suit isolator, mini-environments for electronics
Low pressure integrity/high hourly leak rate enclosure — positive or negative pressure operation	Physical	Rigid construction allows pressure integrity test of leak rate. May be operated under negative pressure.	Isolators, gloveboxes, powder transfer control or hopper, animal test house isolator, biochemical instructional isolators; containment enclosures
Medium pressure integrity/medium hourly leak rate enclosure — positive or negative pressure operation	Physical	Medium pressure integrity.	Isolators, gloveboxes, containment enclosures
High pressure integrity/low hourly leak rate enclosure — positive or negative pressure operation	Physical	High pressure integrity, vacuum and inert gas operation, containment at molecular level.	Isolators, gloveboxes, nuclear glove box, low molecular containment enclosures
NOTE 1 Examples are not design specifications or recommendations.			
NOTE 2 Device boundaries may overlap.			

Dual mode separative devices usually have a large degree of physical separation in their design, and may be capable of either open or contained atmosphere operation during specific periods of their operation.

Air/gas supplied to a separative device should be of sufficient quality to comply with one or more of the classes described in ISO 14644-1. The configuration of the airflow supplied will be application specific.

Both dynamic and static conditions should be specified with regard to

a) air cleanliness required in the separative device,

© ISO 2004 – All rights reserved

Copyright International Organization for Standardization
Provided by IHS Markit under license with ANSI
No reproduction or networking permitted without license from IHS
Licensee=Becton Dickinson - Loc 1 - 61, 64/5984713001, User=Chiu, Shelly
Not for Resale, 10/14/2019 19:24:11 MDT

b) hourly leak rate or separation descriptor, or both,

c) material ingress (transfer devices),

d) material egress (transfer devices).

© ISO 2004 – All rights reserved
Copyright International Organization for Standardization
Provided by IHS Markit under license with ANSI
No reproduction or networking permitted without license from IHS
Licensee=Becton Dickinson - Loc 1 - 61, 64/5984713001, User=Chiu, Shelly
Not for Resale, 10/14/2019 19:24:11 MDT

Annex B
(informative)

Air-handling systems and gas systems

B.1 General

B.1.1 It is normal to protect the extract or exhaust system by an internally-fitted safe change filter.

B.1.2 Over-pressure in a separative device can be avoided by the use of an oil-filled pressure-relief device. The discharge of the pressure-relief device is connected to the exhaust gas system.

B.2 Air-handling systems

B.2.1 Separative device air-handling systems are required to be capable of supplying or extracting sufficient air volume to or from a separative device via the installed filters and associated ductwork of the device.

B.2.2 Air-handling systems should be capable of the following functions:

a) isolating the separative device by valves or sealing plates upstream and downstream of inlet and outlet filtration for safety, decontamination/sterilisation/sanitation/disinfection and integrity testing purposes;

NOTE This does not apply to unrestricted air overspill, restricted air overspill and nominally enclosed separative devices.

b) allowing connections and any other provisions for treatment of air;

c) accommodating the total system initial pressure drop and final pressure drop, allowing for filter loading;

d) changing potentially contaminated filters via a safe change-filter operation that ensures contaminated filters are safely changed. Provision of operator and third-party protection is essential;

e) providing all filters and associated seals with aerosol testing facilities;

f) having secondary HEPA/ULPA filters on any recirculated air;

g) having instrumentation to show separative-device operating pressure/depression and provision for fan/blower failure alarms;

h) having, if required, particle sampling ports to enable air quality to be sampled in the separative device and its transfer devices;

i) maintaining the separative-device extraction systems at negative pressure;

j) ensuring, in the event of glove loss and alarm, capability of an airflow with minimum breach velocity to provide protection to either operator or product;

k) complying with any other equipment or device required by local regulations.

© ISO 2004 – All rights reserved

Copyright International Organization for Standardization
Provided by IHS Markit under license with ANSI
No reproduction or networking permitted without license from IHS
Licensee=Becton Dickinson - Loc 1 - 61, 64/5984713001, User=Chiu, Shelly
Not for Resale, 10/14/2019 19:24:11 MDT

B.3 Gas systems

B.3.1 Introduction

Separative devices with high pressure integrity are normally required for molecular levels necessary for anaerobic or low moisture applications. Inert gas systems should only be used with special precautions and only on equipment designed for their application. Inert gases can kill by asphyxiation. Gas systems are either “once through” or recirculating.

B.3.2 Inert gas systems

Inert-gas separative devices can provide an atmosphere almost free from oxygen and moisture. The three main gases in general use, and in order of cost, are

a) nitrogen,

b) helium,

c) argon.

The applications of inert systems are various and wide ranging.

B.3.3 Active gases

Active gases, e.g. ozone, hydrogen peroxide, chlorine dioxide, peracetic acid and steam, may be used for decontamination purposes [24] [31].

B.3.4 Single-pass gas system

Single-pass gas systems provide flow of gas through the separative devices without recirculation of the gas. Gases from bottled or stored systems should be reduced in pressure before admittance to a flow regulator. From the flow regulator, the gas is piped to the inlet valve and a gas swirler or distribution head, mounted inside the separative device. The gas is swirled to the extremities of the separative device before exiting via an extract valve to discharge.

B.3.5 Inert gas recirculation systems

Inert gas recirculation systems may be comprised of the following elements:

a) recirculation pump;

b) catalytic column(s);

c) molecular column(s);

d) vacuum pump;

e) protection column (optional);

f) inlet filter;

g) associated valves;

h) charge gas;

i) reforming gas system;

--`,,,,`,,,,,`,`,`,,,,,```,`-`-`,,`,,`,`,,`---

© ISO 2004 – All rights reserved
Copyright International Organization for Standardization
Provided by IHS Markit under license with ANSI
No reproduction or networking permitted without license from IHS
Licensee=Becton Dickinson - Loc 1 - 61, 64/5984713001, User=Chiu, Shelly
Not for Resale, 10/14/2019 19:24:11 MDT

j) exhaust gas systems;

k) heat exchangers;

l) moisture meter;

m) oxygen meter;

n) pressure gauge.

A pump is used to recirculate gas. The gas passes through the inlet filter, inlet isolation valve and swirler into the separative device, similar to the single-pass system. The return from the separative device passes through a HEPA filter and isolating valve to a molecular column(s), catalytic column, or both. If solvents or other substances are released, the pump suctions and service columns should be protected by a suitable protective column containing for example activated charcoal or an appropriate absorber. Normal practice would be to fit two columns of each type, one in use and one reforming. Molecular columns are reformed by heating and vacuuming down. Catalytic columns are heated and purged with hydrogen/inert gas mix. Separative-device pressure is maintained by a charge-gas system in conjunction with a low-level pressure switch monitoring separative-device pressure. Overpressure requires a pressure-relief system. Transfer devices should be of the B2 class referred to in Annex D.

B.3.6 Pressure-relief device

The pressure-relief device allows rapid volume changes (e.g. insertion of gloves) to bubble off via the pressure-relief assembly without breaching the inert atmosphere (see Figure B.1).

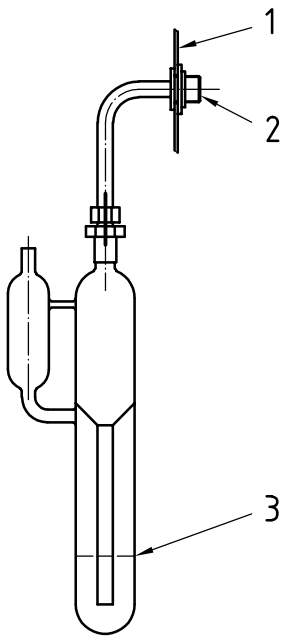

Key

1 end panel

2 from HEPA filter

3 oil level

Figure B.1 — Pressure-relief assembly

© ISO 2004 – All rights reserved

Copyright International Organization for Standardization
Provided by IHS Markit under license with ANSI
No reproduction or networking permitted without license from IHS
Licensee=Becton Dickinson - Loc 1 - 61, 64/5984713001, User=Chiu, Shelly
Not for Resale, 10/14/2019 19:24:11 MDT

Annex C
(informative)

Access devices

C.1 Scope

This annex is intended to be tutorial in nature but not exhaustive. The application of this annex is limited to gloves, gauntlets, glove sleeve systems and half-suits. Gloves tend to form the weakest link in the pressure integrity of a separative device. Operator and product protection is limited by choice of glove system and glove material.

C.2 Glove materials

Glove material should be appropriate for the application and process. The following list of materials gives an outline guidance but is not exhaustive. As new materials are developed, this list may expand. For full information, glove manufacturers should be consulted.

a) Latex, natural rubber or *cis*-1,4-polyisoprene

   Latex, natural rubber or *cis*-1,4-polyisoprene is suitable in cases where great flexibility and good mechanical properties are necessary. However, latex articles are not impermeable to gas, perish in ozone, offer no resistance to flame, hydrocarbons and oxidizing salts and poor resistance to esters, acids and bases. The potential of life-threatening allergic reactions should be considered.

b) Polychloroprene or poly(2-chloro-1,3-butadiene)

   Polychloroprene or poly(2-chloro-1,3-butadiene) is especially recommended when good resistance to oils and greases is needed. This chloroprene is self-extinguishing, i.e. when the source of ignition is removed it no longer continues to burn. Polychloroprene is highly resistant to ozone, ultraviolet light, concentrated acids and bases, and strong oxidising agents.

   Polychloroprene articles are unsuitable for work with hydrocarbons, halogens and esters.

c) Nitrile rubber or copolymer of butadiene and acrylonitrile

   Nitrile rubber or copolymer of butadiene and acrylonitrile is recommended when good resistance to solvents is required. Nitrile articles stand up well to aliphatic hydrocarbons and hydroxyl compounds.

d) Poly(vinyl chloride)

   Although plastic, poly(vinyl chloride) has a certain elasticity and is recommended for its good electrical properties and resistance to chemical agents.

e) Chlorosulfonated polyethylene

   Chlorosulfonated polyethylene offers very good resistance to H_2O_2, and its white colour allows good visual inspection. Other materials are resistant to H_2O_2, as well.

© ISO 2004 – All rights reserved
Copyright International Organization for Standardization
Provided by IHS Markit under license with ANSI
No reproduction or networking permitted without license from IHS
Licensee=Becton Dickinson - Loc 1 - 61, 64/5984713001, User=Chiu, Shelly
Not for Resale, 10/14/2019 19:24:11 MDT

C.3 Sandwich or multi-layer gloves

C.3.1 In order to improve the gas impermeability, sandwich or multi-layer gloves are made up of a polychloroprene base, a layer of butyl rubber and an outer layer of polychloroprene. The resulting glove possesses all the technological qualities of polychloroprene but is more impermeable to gases due to the butyl layer.

C.3.2 In the special case where resistance to strong oxidising agents is inadequate, polychloroprene gloves can be coated with a chlorosulfonated polyethylene-based protective layer. The chlorosulfonated polyethylene then provides protection against all strong oxidising agents.

C.3.3 In the event of even stricter conditions of use, the polychloroprene can be coated with a fluoroelastomer terpolymer**,** which has an excellent resistance to oils, essences, lubricants, most inorganic acids and many aliphatic and aromatic hydrocarbons (e.g. carbon tetrachloride, toluene, benzene and xylene).

C.3.4 Poly(vinyl chloride) loaded with lead provides an ionizing-radiation-shielding film. These type of gloves, which require delicate handling, are normally worn as a pre-glove or inner glove.

C.4 Glove size

C.4.1 General

Separative-device gloves are made in a range of standards sizes. If several operators are required to work on the same device, the size of the largest hand is naturally chosen.

When several operators use the same glove, consideration should be given to hygiene.

C.4.2 Length of glove or sleeving

The length of the glove is chosen in accordance with the depth of the separative device. Typical lengths are 700 mm, 750 mm and 800 mm. The length of the sleeving is chosen as a function of the application.

C.4.3 Shape of the glove

Glove shapes are ambidextrous, left-hand and right-hand. For a separative device with several openings, adoption of the ambidextrous glove is advised, permitting use of the same glove with either the left or the right hand. Several cuff shapes are also available, such as conical, telescopic and cylindrical.

C.5 Available thickness

Varying thicknesses are available and should be selected as a function of tactile requirement, permeability, chemical resistance, mechanical strength and wear resistance.

C.6 Glove ports

C.6.1 The gloves or sleeves attached to separative devices are usually mechanically retained.

C.6.2 Glove ports may have a glove-port “bung” facility. The glove-port bung is a removable item that can provide a high integrity seal when a glove or glove sleeve system is not in use.

C.6.3 The examples in C.6.3.1 and C.6.3.2 are two of the many methods for glove or glove sleeve system replacements.

© ISO 2004 – All rights reserved

Copyright International Organization for Standardization
Provided by IHS Markit under license with ANSI
No reproduction or networking permitted without license from IHS
Licensee=Becton Dickinson - Loc 1 - 61, 64/5984713001, User=Chiu, Shelly
Not for Resale, 10/14/2019 19:24:11 MDT

C.6.3.1 The following instructions are provided for glove/glove-sleeve replacement using a glove-port bung, assuming the glove-port bung is fitted in position.

a) Remove glove-strap assembly, gaiter extrusion and O-ring groove on glove port.

b) Slip replacement glove over old glove and engage O-ring bead of glove into inner O-ring groove on port.

c) Through new glove, ease old glove off port so that it is loose inside new glove. Care should be taken not to dislodge new glove.

d) Replace O-ring, gaiter extrusion and glove-strap assembly, securing new glove in position.

e) Place hand in new glove, remove bung and pass old glove into separative device in readiness to be bagged out.

C.6.3.2 The design of the glove port allows the sleeves and gloves or gauntlets to be changed without using glove-port bungs, thereby minimising the risk of breaching separative-device conditions. See Figures C.1 and C.2 for aid in the sleeve-changing procedure.

Instructions for replacement are provided as follows.

a) Ensure that the new sleeve to be used is fitted with a cuff ring and glove;

b) Remove the security clamp gaiter and O-ring and then, with extreme care, manoeuvre the elasticised hem of the sleeve or gauntlet from the second to the first groove of the port;

c) Fit the new sleeve or gauntlet by passing the elasticised hem over the existing sleeve and onto the second groove of the port (nearest to separative device);

d) Working from within the new glove, carefully manoeuvre the old sleeve hem out of the first groove of the port, and remove into the separative-device interior for future use or remove from the unit altogether via the pass-box door or bag-out facility;

e) Finally, replace O-ring gaiter and metal clamp to secure the new hem in the first groove.

C.7 Sleeves and gloves

C.7.1 Description

The sleeves have cuffs that are elasticised to provide a good secure grip. The sleeves are attached to the glove ports and are securely fastened by the action of an O-ring gaiter and metal clamp in a similar manner to a gauntlet glove. The opposite ends of the sleeves are fitted with interchangeable glove cuff rings.

C.7.2 Changing gloves

It is possible to change gloves minimising risk of breaching work zone atmosphere by simply removing the old glove from the cuff ring. A sterile change method is recommended. As an example, by following the instructions while referencing Figures C.2 a) to C.2 c), a “safe change” of gloves (without breaking the integrity of the system) is relatively easy.

However, the glove-change system should be practised on a regular basis to ensure all operators performing the task are competent at this procedure.

Instructions for replacement are provided as follows.

a) Place a new pair of gloves into the working zone via the transfer device;

b) Remove the glove security O-ring;

© ISO 2004 – All rights reserved
Copyright International Organization for Standardization
Provided by IHS Markit under license with ANSI
No reproduction or networking permitted without license from IHS
Licensee=Becton Dickinson - Loc 1 - 61, 64/5984713001, User=Chiu, Shelly
Not for Resale, 10/14/2019 19:24:11 MDT

c) Manoeuvre the glove-cuff bead from the centre groove of the cuff ring into the outer groove, taking care not to break the air seal formed by the glove on the cuff ring [see Figure C.2 a)];

d) Pull the glove gently up inside the sleeve and hold it [see Figure C.2 b)];

e) Take the new glove and shake it straight. Align the new glove, using the free hand, so that the thumb of the glove points upwards. Using the thumb of the hand inside the sleeve, trap the glove-cuff bead onto the centre groove of the cuff ring. Gently stretch the glove cuff into the centre groove with the free hand [see Figure C.2 c)];

f) With the fingers of the hand holding the old glove, gently ease the old glove off the cuff ring at one point and work the old glove around the diameter of the cuff ring until it is free. The glove is now inside out and can be removed from the sleeve and discarded as contaminated waste;

g) Refit the glove security O-ring, holding the O-ring in position initially through the wall of the sleeve with a finger or thumb.

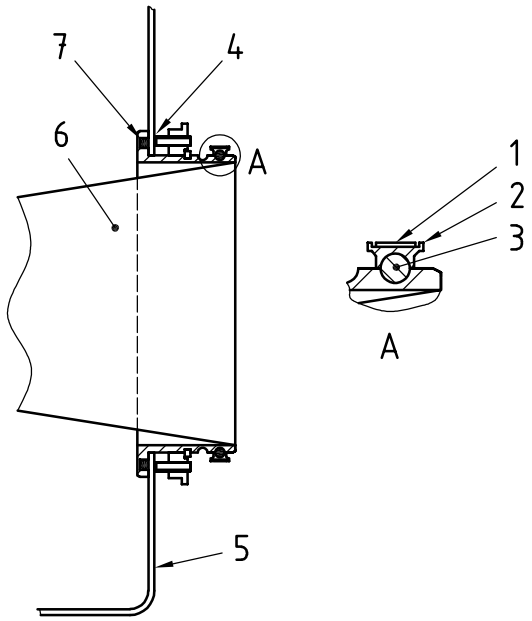

Key

1 glove strap assembly
2 gaiter extrusion
3 O-ring seal
4 seal
5 separative-device shell (inside)
6 glove
7 glove port

Figure C.1 — Glove port and glove assembly

© ISO 2004 – All rights reserved

Copyright International Organization for Standardization
Provided by IHS Markit under license with ANSI
No reproduction or networking permitted without license from IHS
Licensee=Becton Dickinson - Loc 1 - 61, 64/5984713001, User=Chiu, Shelly
Not for Resale, 10/14/2019 19:24:11 MDT

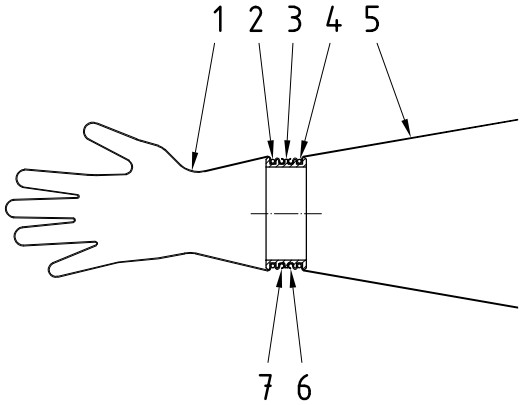

Key

1 glove
2 glove O-ring
3 cuff ring
4 sleeve O-ring
5 sleeve
6 sleeve bead
7 glove bead

a) Glove-change procedure — Step 1

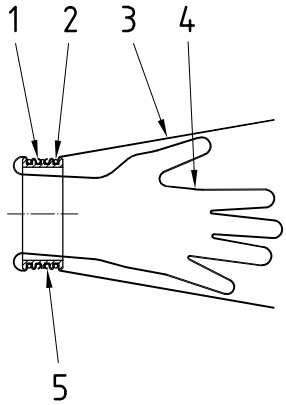

Key

1 old glove bead
2 sleeve O-ring
3 sleeve
4 old glove
5 sleeve bead

b) Glove-change procedure — Step 2

Figure C.2 — Glove-change procedure

--`,,,,`,,,,,`,`,`,,,,,```,`-`-`,,`,,`,`,,`---

© ISO 2004 – All rights reserved
Copyright International Organization for Standardization
Provided by IHS Markit under license with ANSI
No reproduction or networking permitted without license from IHS
Licensee=Becton Dickinson - Loc 1 - 61, 64/5984713001, User=Chiu, Shelly
Not for Resale, 10/14/2019 19:24:11 MDT

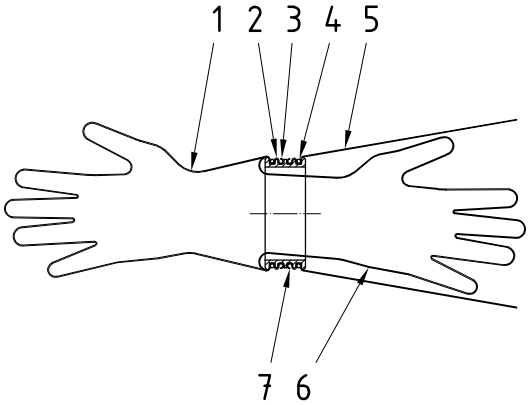

Key

1 new glove
2 old glove bead
3 new glove bead
4 sleeve O-ring
5 sleeve
6 old glove
7 sleeve bead

c) Glove-change procedure — Step 3

Figure C.2 — Glove-change procedure *(continued)*

C.8 Half-suits

C.8.1 A half-suit normally consists of a double-lined suit usually manufactured from a welded flexible poly(vinyl chloride) with a clear rigid acrylic vision panel welded into the helmet section. The half-suits are attached to the separative device and are normally positioned for vertical access.

C.8.2 The double lining allows the suit to be pressurised between the linings for use in positive-pressure applications, thus preventing the suit “clamping” onto the operator and restricting movement. Single-skin half-suits can be used on negative-pressure applications.

C.8.3 Half-suits should incorporate suspension points to allow for elasticised fastenings to hold the suit in a suitable attitude and minimise suit-weight burden beyond ergonomic limits.

C.8.4 Attachment of glove to suit is similar to the glove-sleeve cuff arrangement.

© ISO 2004 – All rights reserved

Copyright International Organization for Standardization
Provided by IHS Markit under license with ANSI
No reproduction or networking permitted without license from IHS
Licensee=Becton Dickinson - Loc 1 - 61, 64/5984713001, User=Chiu, Shelly
Not for Resale, 10/14/2019 19:24:11 MDT

Annex D
(informative)

Examples of transfer devices

D.1 Introduction

This annex provides examples of transfer devices referred to in 7.2. These diagrams are only intended to be illustrated examples of possible configurations and are not normative design specifications [26]. The examples are not exhaustive.

D.2 A1 transfer device

When operated in accordance with a validated transfer procedure, air can flow freely through the A1 transfer device (see Figure D.1) between the background environment and the separative-device environment when the door is open.

EXAMPLES Doors, access panels, zips, hook and loop tape, poppers and “jam pot” covers, bag-in-bag-out.

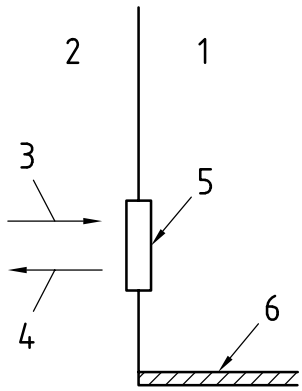

Key

1 separative-device environment
2 background environment
3 ingress
4 egress
5 sealed door
6 work surface of controlled workspace

Figure D.1 — A1 transfer device

© ISO 2004 – All rights reserved
Copyright International Organization for Standardization
Provided by IHS Markit under license with ANSI
No reproduction or networking permitted without license from IHS
Licensee=Becton Dickinson - Loc 1 - 61, 64/5984713001, User=Chiu, Shelly
Not for Resale, 10/14/2019 19:24:11 MDT

D.3 A2 transfer device

When operated in accordance with a validated transfer procedure in a dynamic state, air flows freely through the A2 transfer device (see Figure D.2) out of the separative device environment.

EXAMPLES Dynamic holes, mouse holes.

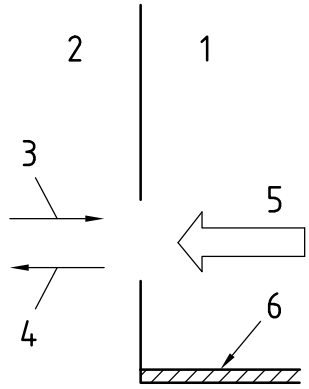

Key

1 separative-device environment
2 background environment
3 ingress
4 egress
5 airflow
6 work surface of controlled workspace

Figure D.2 — A2 transfer device

--`,,,,`,,,,`,`,`,,,,``,`-`-`,,`,`,`,`---

© ISO 2004 – All rights reserved

Copyright International Organization for Standardization
Provided by IHS Markit under license with ANSI
No reproduction or networking permitted without license from IHS
Licensee=Becton Dickinson - Loc 1 - 61, 64/5984713001, User=Chiu, Shelly
Not for Resale, 10/14/2019 19:24:11 MDT

D.4 B1 transfer device

The B1 transfer device (see Figure D.3), when operated in accordance with a correct sequence or interlocked transfer procedure, does not permit the direct passage of air between the background environment and separative-device environment. However, air from the background environment can be trapped and then released into the separative-device environment, and air from the separative-device environment can be trapped and released into the background environment.

EXAMPLES Double-door sealed transfer chambers, bagging ports, telescopic waste ports and simple docking devices.

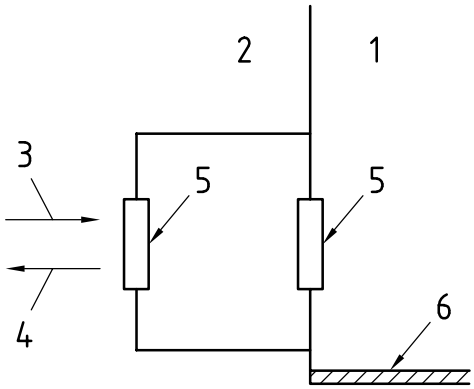

Key

1 separative-device environment
2 background environment
3 ingress
4 egress
5 sealed door
6 work surface of controlled workspace

Figure D.3 — B1 transfer device

© ISO 2004 – All rights reserved
Copyright International Organization for Standardization
Provided by IHS Markit under license with ANSI
No reproduction or networking permitted without license from IHS
Licensee=Becton Dickinson - Loc 1 - 61, 64/5984713001, User=Chiu, Shelly
Not for Resale, 10/14/2019 19:24:11 MDT

D.5 B2 transfer device

The B2 transfer device (see Figure D.4) has double sealed doors and facilities that permit the purging and evacuation of the transfer device to ensure compatibility of environments before breaching the interconnection to the separative-device environment.

Evacuation gases require safe disposal.

NOTE Evacuation may not be possible with liquid transfer, depending on the liquid boiling point/pressure relationship.

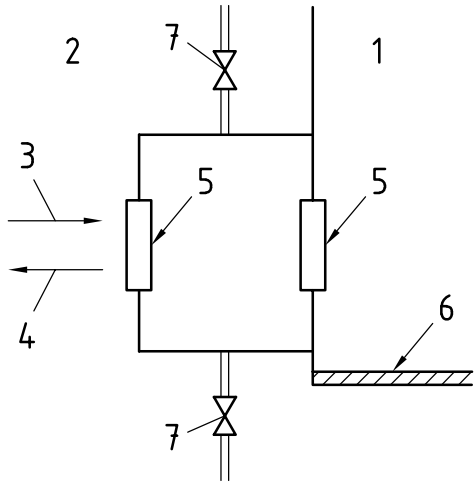

Key

1 separative-device environment
2 background environment
3 ingress
4 egress
5 sealed door
6 work surface of controlled workspace
7 valve

Figure D.4 — B2 transfer device

Copyright International Organization for Standardization
Provided by IHS Markit under license with ANSI
No reproduction or networking permitted without license from IHS
Licensee=Becton Dickinson - Loc 1 - 61, 64/5984713001, User=Chiu, Shelly
Not for Resale, 10/14/2019 19:24:11 MDT

D.6 C1 transfer device

The C1 transfer device (see Figure D.5) has doors and HEPA filters which, when used in a positive-pressure separative device and operated in the correct sequence, do not allow unfiltered air from the background environment to reach the separative-device environment but which may allow unfiltered air from the separative-device environment to reach the background environment. Such transfer devices are not suitable for negative-pressure separative devices because unfiltered air from the background environment would be allowed to reach the separative-device environment. C1 transfer devices are not recommended where operator and third-party protection is required in positive-pressure separative devices.

EXAMPLE Single-filtered transfer chambers.

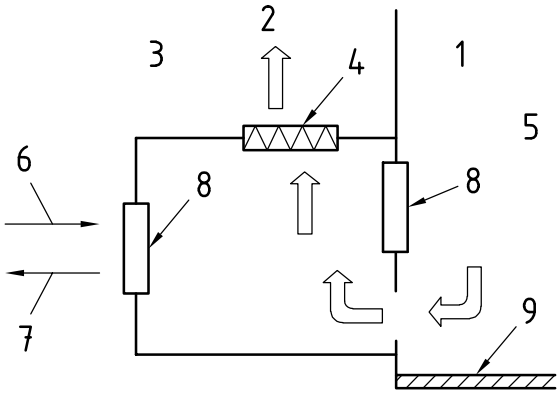

Key

1 separative-device environment
2 airflow
3 background environment
4 HEPA filter
5 positive pressure
6 ingress
7 egress
8 sealed door
9 work surface of controlled workspace

Figure D.5 — C1 transfer device

© ISO 2004 – All rights reserved
Copyright International Organization for Standardization
Provided by IHS Markit under license with ANSI
No reproduction or networking permitted without license from IHS
Licensee=Becton Dickinson - Loc 1 - 61, 64/5984713001, User=Chiu, Shelly
Not for Resale, 10/14/2019 19:24:11 MDT

D.7 C2 transfer device

The C2 transfer device (see Figure D.6) has doors and HEPA filters which, when used in a negative-pressure separative device and operated in the correct sequence or interlocked transfer procedure, do not allow unfiltered air from the background environment to reach the separative-device environment (such air passes straight into the space below the work surface of the separative-device environment and then exits through an exhaust) or unfiltered air from the separative-device environment to reach the background environment with the separative device in an operational state. Such transfer devices are not appropriate for use with a positive-pressure separative device.

EXAMPLE Single-filtered transfer chambers.

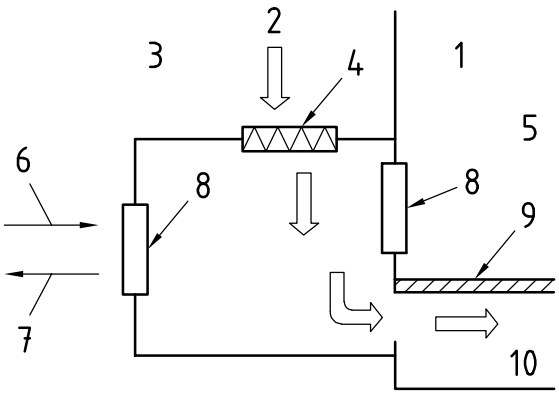

Key

1 separative-device environment
2 airflow
3 background environment
4 HEPA filter
5 negative pressure
6 ingress
7 egress
8 sealed door
9 work surface in controlled workspace
10 exhaust

Figure D.6 — C2 transfer device

© ISO 2004 – All rights reserved

Copyright International Organization for Standardization
Provided by IHS Markit under license with ANSI
No reproduction or networking permitted without license from IHS
Licensee=Becton Dickinson - Loc 1 - 61, 64/5984713001, User=Chiu, Shelly
Not for Resale, 10/14/2019 19:24:11 MDT

D.8 D1 transfer device

The D1 transfer device (see Figure D.7) has doors and HEPA filters which, when operated in the correct sequence or interlocked transfer procedure, do not permit unfiltered air from the background environment to reach the separative-device environment or unfiltered air from the separative-device environment to reach the background environment.

EXAMPLES Double-filter transfer chambers, or separative devices used as a transfer device.

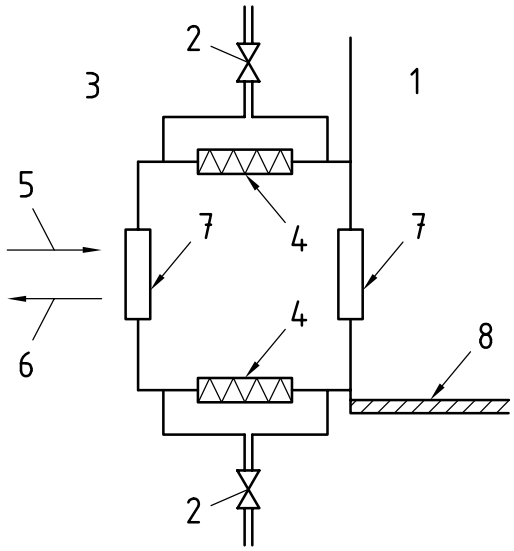

Key

1 separative device environment
2 valve
3 background environment
4 HEPA filter
5 ingress
6 egress
7 sealed door
8 work surface of controlled workspace

Figure D.7 — D1 transfer device

D.9 D2 transfer device

The D2 transfer device is a D1 transfer device described in D.8 fitted with interlocked and time-delayed ingress/egress control which, when operated with a valid transfer procedure, will create a period to allow any surface decontamination procedure sufficient time to minimise transference of contamination.

© ISO 2004 – All rights reserved
Copyright International Organization for Standardization
Provided by IHS Markit under license with ANSI
No reproduction or networking permitted without license from IHS
Licensee=Becton Dickinson - Loc 1 - 61, 64/5984713001, User=Chiu, Shelly
Not for Resale, 10/14/2019 19:24:11 MDT

D.10 E transfer device

The E transfer device (see Figure D.8) is subject to sanitation together with its contents, if any, before being opened into other areas which have been subject to sanitation.

EXAMPLES Gassable/autoclavable transfer devices, including certain transfer separative devices and docking devices, permanently connected autoclaves and similar devices.

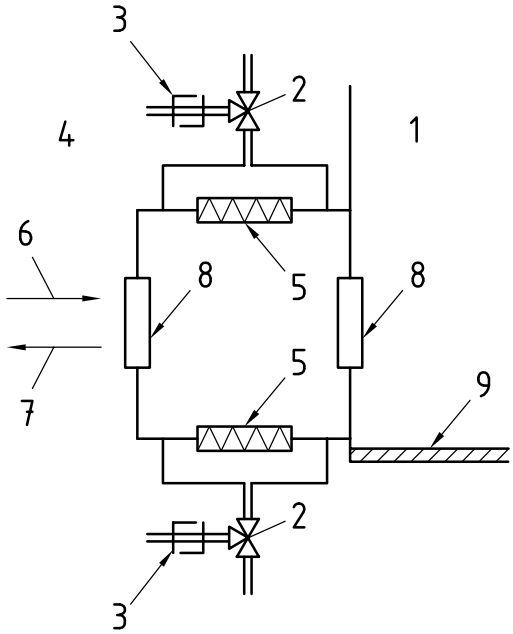

Key

1 separative-device environment
2 three-way valve
3 quick-connect coupling
4 background environment
5 HEPA filter
6 ingress
7 egress
8 sealed door
9 work surface of controlled workspace

Figure D.8 — E transfer device

--`,,,,`,,,,,`,`,`,,,,,`,`,`,`,`,`,`,`,`,,`,`,`,`,`---

Copyright International Organization for Standardization
Provided by IHS Markit under license with ANSI
No reproduction or networking permitted without license from IHS
Licensee=Becton Dickinson - Loc 1 - 61, 64/5984713001, User=Chiu, Shelly
Not for Resale, 10/14/2019 19:24:11 MDT

D.11 F transfer device

The F transfer device (see Figure D.9) docks and seals onto a separative device. The transfer device is commonly used as a transport container. Some devices may have disconnects for air bleed.

EXAMPLES Rapid transfer systems, standard mechanical interfaces, and split valve connections.

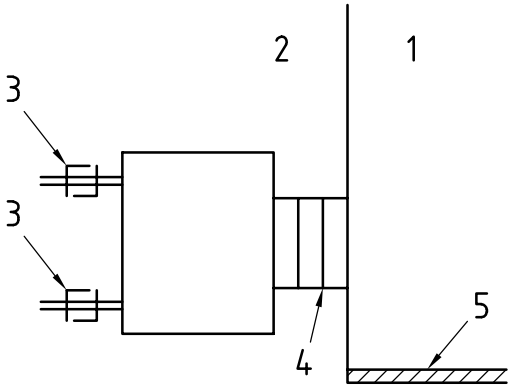

Key

1 separative-device environment
2 background environment
3 quick-connect coupling
4 double interlocked doors or valves
5 work surface or controlled workspace

Figure D.9 — F transfer device

© ISO 2004 – All rights reserved
Copyright International Organization for Standardization
Provided by IHS Markit under license with ANSI
No reproduction or networking permitted without license from IHS
Licensee=Becton Dickinson - Loc 1 - 61, 64/5984713001, User=Chiu, Shelly
Not for Resale, 10/14/2019 19:24:11 MDT

Annex E
(informative)

Leak testing

E.1 Induction leak testing

E.1.1 Procedures

The test procedures should be applied under normal operating conditions. Where pressure or flow is used to create velocity or mass flow to minimize or prevent transfer of unwanted matter, the capability of such systems should be established by agreed, quantifiable, repeatable test procedures.

The test procedures should take into consideration

a) normal operation,

b) at rest or standby,

c) transient changes during a) and b),

d) pressure or airflow failure.

Where glove and glove system are used, the induction testing should include the transient volume change when all operator glove positions are inserted or withdrawn simultaneously, as significant pressure changes in excess of 1 000 Pa can be experienced.

Any equipment with a similar volumetric effect should also be included in the test procedure.

E.1.2 Test equipment

Test equipment and procedures should be appropriate to the process. Suitable test equipment consists of

a) aerosol generator and photometer,

b) aerosol generator and dual-reading discrete particle counter,

c) spinning-disk droplet generator or similar challenge, and appropriate detection system.

E.1.3 Method

Aerosol is generated outside of the separative device at the region of interest. Comparisons of the outside and inside particle concentrations are made to determine if significant penetration has occurred.

Test procedures and protocols should be developed for each application.

E.2 Pressure leak detection

E.2.1 Major leaks can be detected by several alternative methods. The methods in E.2.1.1 and E.2.1.2 are indicative.

© ISO 2004 – All rights reserved

Copyright International Organization for Standardization
Provided by IHS Markit under license with ANSI
No reproduction or networking permitted without license from IHS
Licensee=Becton Dickinson - Loc 1 - 61, 64/5984713001, User=Chiu, Shelly
Not for Resale, 10/14/2019 19:24:11 MDT

E.2.1.1 Apply a good quantity of soap solution to suspected area of the separative device under test. Leaks will be apparent by bubbling of the soap solution.

E.2.1.2 As a first alternative to the test in E.2.1.1, leaks may be detected by filling the separative device with helium or suitable alternative to a positive pressure of up to 1 000 Pa. Using a suitable probe, suspected areas can be monitored for leaks.

NOTE 1 Neither of the methods in E.2.1.1 or E.2.1.2 is quantitative although, with tracer gas, discrimination can be made between levels of leaks.

NOTE 2 Other methods can be used for locating leaks, such as pressurisation with ammonia gas and detection with wet pH-indicating cloth, or the use of visible smoke with visual, photographic or video documentation.

E.2.2 The following methods, in order of increasing sensitivity, are given as guidance:

a) use of bubble testing using a suitable surfactant;

b) use of a thermal conductivity “sniffer” probe with CO_2, He, Ar, etc.;

c) use of an ionisation detector “sniffer” probe with SF_6;

d) use of helium mass spectrometer with “sniffer” probe with helium.

It is conventionally assumed that the leakage of a separative device is evenly distributed and does not occur through a single leak path. This assumption may not be appropriate in a separative device. A single leak path could produce an unacceptable local deterioration of the atmosphere. Therefore the design should emphasise, where applicable, the prime importance of specifying a suitable leak method.

Precautions should be used when using inert test gases. Inert gases can kill by asphyxiation.

When using helium, care should be taken to ensure that the gas test mixture inside the device is well mixed.

NOTE 1 Helium can penetrate polymeric materials and the off-gassing can create false positives.

NOTE 2 More information may be found in reference [24].

E.3 Quantitative leak testing

E.3.1 Pressure integrity testing

E.3.1.1 Leak testing for negative pressure rigid wall separative devices

ISO 10648-2 specifies three methods of leak testing for negative pressure, rigid wall separative devices described in ISO 10648-1:

a) oxygen method (see ISO 10648-2:1994, 5.1);

b) pressure change method (see ISO 10648-2:1994, 5.2);

c) constant pressure method (see ISO 10648-2:1994, 5.3).

The leak rate is measured at the normal operating pressure (usually about 250 Pa) for checking during operational use, and up to 1 000 Pa for the acceptance test.

The above methods are specified for negative-pressure tests, which apart from the oxygen method can be undertaken either in positive- or negative-pressure mode. The appropriate mathematical changes needed to be undertaken when calculating the results.

© ISO 2004 – All rights reserved
Copyright International Organization for Standardization
Provided by IHS Markit under license with ANSI
No reproduction or networking permitted without license from IHS
Licensee=Becton Dickinson - Loc 1 - 61, 64/5984713001, User=Chiu, Shelly
Not for Resale, 10/14/2019 19:24:11 MDT

A further pressure-test method (Parjo), which can be applied over the same hourly leak-rate range as the above methods, is also included in Annex F. The Parjo test may be appropriate for conditions requiring minimisation of contamination of the test equipment or reduction of test times.

Pressure tests at close to atmospheric conditions are subject to changes in temperature and ambient parameters. The use of sensitive instruments to measure parameters will greatly contribute to the accuracy of these tests.

Separative devices that may, during normal operation or system failure, experience both positive and negative modes should establish quantitative leakage rates in both states.

E.3.1.2 Pre-test precautions

The integrity pressure testing will likely be applied only in instances where minimal risks are involved. However, any test carries some small degree of risk to equipment and operator.

During the acceptance test, the safety precautions to be observed are essentially common-sense and related to excessive over- or under-pressure conditions of the separative device under test. The specific proof test pressure should never be exceeded, since structural damage can be caused to thin walls, etc. Depression tests are also liable to cause damage, i.e. collapsing of light structures.

When testing equipment for high or medium pressure integrity, a more questioning approach is required. An isolation pressure rise test, i.e. a leak rate test, requires a constant volume. These test methods are highly sensitive to small volume changes, therefore any installed equipment which may be liable to a volume change can not only lead to spurious result but also allow the release of materials, e.g. oil and grease.

If inert gas from pressurised containers is to be used as a test medium, the necessary pressure relief and regulation equipment must be installed and checked before tests are carried out. (Refer to appropriate precautions in the handling, storage and use of compressed gases.)

The leak rate testing of “active” separative devices demands special attention. It is imperative that local safety regulations be followed. Before testing is contemplated, a thorough enquiry should be completed. The enquiry should ensure that isolation of the separative device can be carried out in a logical and safe manner that allows a rapid return to normal operating conditions in the event of an emergency.

When tests have been completed or postponed, it is important to ensure that the separative device is made safe, especially if left unattended overnight in unheated conditions. A temperature drop of a few degrees can cause considerable stress on a thin-wall section left in negative-pressure conditions.

E.3.1.3 Achieving stable conditions

Before any leak rate test can be started, the separative device should be in a quiescent state. Where possible and practicable, separative devices that are liable to change volume by “panting” or movement of panels or other light structures should be constrained during the test period. The allowable leak rate and the sensitivity required to detect the rate are important factors. If very low leak rates are required, achieving a stable condition is sometimes difficult due to climatic changes. If practicable, the separative device should be insulated. Small changes in ambient conditions can produce apparent leak rates approaching or even exceeding allowable rates. The separative device under test needs to be in an area free from the effects of direct sunlight and drafts. To ensure that all equipment is at the same temperature, the test equipment should be in position approximately 30 min prior to the test, or longer if possible.

Maintaining stable ambient conditions can be difficult. If the necessary stability cannot be maintained for the test period, then the test should be conducted before or after normal working hours.

The testing of separative devices in a controlled atmosphere can present some difficulties. Inadequate or faulty controls can cause sudden variations in the atmospheric pressure, and access through airlock doors may need to be restricted while observations are proceeding. It is essential to consider the relevant safety orders in force. The best approach may be to carry out the test during quiet hours or during meal breaks.

© ISO 2004 – All rights reserved

Copyright International Organization for Standardization
Provided by IHS Markit under license with ANSI
No reproduction or networking permitted without license from IHS
Licensee=Becton Dickinson - Loc 1 - 61, 64/5984713001, User=Chiu, Shelly
Not for Resale, 10/14/2019 19:24:11 MDT

E.3.1.4 Equation development

Velocity through an orifice, assuming the orifice and expansion coefficients are unity, is given by

$$v = \sqrt{\frac{2\Delta p}{\rho}} \tag{E.1}$$

where

v is the velocity, in metres per second;

ρ is the density, in kilograms per cubic metre (dry air = 1,205 kg·m^{-3} at 101,3 kPa, 20 °C);

Δp is the differential pressure, in pascals, across the orifice.

Volumetric flow rate is equal to velocity times area, therefore

$$q = \sqrt{\frac{2\Delta p}{\rho}} \times A \times 3\,600 \tag{E.2}$$

where

q is the hourly leakage from the separative device, in cubic metres per hour;

A is the area, in square metres.

Substituting

$$\sqrt{\frac{2}{\rho}} = \sqrt{\frac{2}{1{,}205}} = 1{,}28 \tag{E.3}$$

$$q = 1{,}28 \times 3\,600 A\sqrt{\Delta p} \tag{E.4}$$

NOTE 1 Orifice size and differential pressure are the only considerations in calculating the leak flow rate.

NOTE 2 Potential risks from leaks require careful assessment. Inward leakage in negative-pressure devices through small orifices tend to produce high-velocity jets of potential contamination that are unlikely to be diluted by the airflow of the separative device. Similarly, positive-pressure devices that have similar outward leaks can create unacceptable localised contamination.

The test methods in Clause E.3 for constant-volume separative devices follow the combined Gas Law equation (in absolute terms):

$$\frac{p_1 \cdot V_1}{T_1} = \frac{p_2 \cdot V_2}{T_2} \tag{E.5}$$

where

p is the absolute pressure, in pascals;

T is the absolute temperature, in kelvins;

V is the volume of the separative device, in cubic metres.

NOTE 1 For a constant volume, 1 K variation in temperature will cause a 334 Pa variation in pressure.

© ISO 2004 – All rights reserved
Copyright International Organization for Standardization
Provided by IHS Markit under license with ANSI
No reproduction or networking permitted without license from IHS
Licensee=Becton Dickinson - Loc 1 - 61, 64/5984713001, User=Chiu, Shelly
Not for Resale, 10/14/2019 19:24:11 MDT

NOTE 2 The test procedures (except for Parjo) are conducted for 1 h duration and an initial test pressure at or above 1 kPa. The volume of the gas leaking (in or out) is proportional to the pressure change when corrected for any barometer and temperature changes.

By maintaining constant volume and factoring volume from both sides of the equation, the formula becomes:

$$V\left[\frac{p_1}{T_1}=\frac{p_2}{T_2}\right] \tag{E.6}$$

The test procedures in Clause E.3 are conducted for 1 h duration and an initial test pressure at or above 1 000 Pa for commissioning. The volume of gas leaking either in or out of the total test volume (constant) is proportional to the pressure change. Therefore, the hourly leak rate is equal to the fractional pressure change in one hour. Changes in temperature and barometric pressure during the test require corrections to the hourly leak rate as shown by Equation (E.6).

E.3.1.5 Hourly leak rate

The hourly leak rate R_h of the separative device, expressed in reciprocal hours (h^{-1}), is given by:

$$R_h=\frac{q}{V} \tag{E.7}$$

where

q is the hourly leakage of the separative device, in cubic metres per hour;

V is the volume of the device, in cubic metres.

NOTE With the exception of the oxygen test, the test methods assume constant-volume rigid structure devices. Thin- or flexible-system leakage rates obtained by pressure methods will vary due to volume changes.

Gloves and half-suits should be blanked off during containment leak tests using other than the oxygen method.

E.3.1.6 Classification

The classification of separative devices according to hourly leakage rate is shown in Table E.1.

Table E.1 — Classification of separative devices and appropriate test methods

Class	Hourly leak rate R_h h^{-1}	Pressure integrity	Test methods
1	$\leqslant 5 \times 10^{-4}$	High	Oxygen method, pressure change method or Parjo method
2	$< 2{,}5 \times 10^{-3}$	Medium	Oxygen method, pressure change method or Parjo method
3	$< 10^{-2}$	Low	Oxygen method, pressure change method or constant pressure method
4	$< 10^{-1}$		Constant pressure method

NOTE 1 The classification and specified test methods in ISO 10648-2 were combined with pressure integrity levels to allow comparison with the separation continuum in Annex A.

NOTE 2 Parjo method was included where appropriate.

NOTE 3 ISO 10648-2 test methods apply to negative-pressure separative devices but can be modified for positive-pressure separative devices, with the exception of the oxygen method.

© ISO 2004 – All rights reserved

Copyright International Organization for Standardization
Provided by IHS Markit under license with ANSI
No reproduction or networking permitted without license from IHS
Licensee=Becton Dickinson - Loc 1 - 61, 64/5984713001, User=Chiu, Shelly
Not for Resale, 10/14/2019 19:24:11 MDT

E.3.2 Mass balance method for estimation of acceptable hourly leak rate

E.3.2.1 Rationale

The rationale is based on the fact that, where there is airborne contamination on the outside of a negative-pressure separative device, flow through the leak allows this airborne contamination to reach the inside of the separative device. Where there is airborne contamination on the inside of a positive-pressure separative device, flow through the leak allows this airborne contamination to reach the background environment around the separative device. In both cases, the concentration of the leak can be diluted by any airflow in the space that it enters. A mass balance equation is used to estimate the hourly leak rate from the equilibrium concentration of contaminant in the two air volumes connected by the leak.

E.3.2.2 Limitations

E.3.2.2.1 The calculations do not take into account local conditions at a leak where the level of contamination from the leak may not have been diluted to the acceptable level. In practice, a significant safety factor should be allowed to minimise local effects.

E.3.2.2.2 It is assumed that a risk analysis has been used to establish the maximum acceptable concentration of contaminant, with respect to product quality in the case of negative-pressure separative devices or with respect to operator safety in the case of positive-pressure separative devices.

It is assumed that

— the concentration of contaminant in the leak is the same as the concentration of contaminant in the upstream (higher pressure) space,

— air in the space affected by the leak is well mixed (which is not the expected condition in unidirectional or low velocity airflow),

— air mixing with the leak has no initial concentration of contaminant,

— the process has reached a steady state.

E.3.2.3 Estimation

The hourly leak rate, subject to the limitations in E.3.2.2, is estimated by the following equation:

$$R_{\mathrm{h}} = \frac{V_{\mathrm{s}} R_{\mathrm{ac}} c_{\mathrm{a}}}{c_1 V} \qquad \text{(E.8)}$$

where

R_{h} is the hourly leak rate, in reciprocal hours (h^{-1});

V_{s} is the volume of the space affected by the leak, in cubic metres;

c_{a} is the acceptable concentration of airborne contamination in the space affected by the leak, in millilitres per cubic metre (or any other suitable measure);

R_{ac} is the air change rate in the space affected by the leak, in reciprocal hours (h^{-1});

c_1 is original concentration of airborne contamination in the leak itself, in millilitres per cubic metre (or in the same units as c_{a});

V is the volume of the separative device, in cubic metres.

© ISO 2004 – All rights reserved
Copyright International Organization for Standardization
Provided by IHS Markit under license with ANSI
No reproduction or networking permitted without license from IHS
Licensee=Becton Dickinson - Loc 1 - 61, 64/5984713001, User=Chiu, Shelly
Not for Resale, 10/14/2019 19:24:11 MDT

This formula is written so it can apply to the inside space of a negative-pressure separative device or to the background environment space of a positive-pressure separative device.

E.4 Quantitative leak testing of flexible-film separative devices

E.4.1 Flexible-film separative devices may be damaged during testing with differential pressures excessively greater than operating pressures.

E.4.2 Flexible-film separative devices should be tested using the oxygen method.

NOTE Once quantitative acceptance results have been obtained, it is worthwhile to undertake a positive-pressure test for comparative routine testing at operating pressures, especially for a separative device that should not be compromised by the use of negative-pressure testing, e.g. a sterile separative device.

Separative devices that cannot achieve the classification acceptance test pressure of 1 000 Pa but still require an hourly leak rate for hazard analysis purposes should test at 250 Pa for times less than 1 h. The resulting hourly leak rate should be doubled for the purposes of analysis [see Equation (E.4)].

E.5 Examples of glove leak tests

E.5.1 General

The pressure decay tests described are only a few of many tests that can be used for glove testing and are intended to illustrate glove leak test procedures. Other glove leak test methods may be used as agreed by customer and supplier in appropriate situations.

E.5.2 Test for negative-pressure separative devices

E.5.2.1 Overview

Visual inspection of gloves is important, as pressure may not reveal possible “self-sealing” damage. The test in E.5.2.2 describes a simple method for testing gloves for leaks in negative-pressure separative devices operating at a pressure drop greater than – 170 Pa. The *in situ* glove-leak tester is comprised of a sensitive manometer or similar device fitted to a sealing plate. This is suitable for testing gloves/gauntlets/glove sleeve systems fitted to glove ports.

E.5.2.2 Method of operation

To perform the test, the following procedure is recommended.

a) Switch on the manometer.

b) If the manometer has a HI-LO range switch, select the LO range setting.

c) Adjust the manometer to zero. Small variations of ± 3 Pa to ± 4 Pa from zero will not adversely effect the result or the sensitivity of the tests. Once the unit has been “zeroed”, the unit can be used to test the integrity of gloves/gauntlets.

d) Gently position the sealing plate of the glove-leak tester against the glove-port ring of the glove/gauntlet to be tested, taking care to ensure that the sealing plate is aligned with the glove port. Forceful positioning of the unit may trap a small positive pressure of air between the unit and the glove.

e) Press the unit firmly against the glove port with a constant force, and carefully observe the reading of the manometer. The action of pressing the unit with different forces may cause fluctuations of ± 3 Pa to ± 4 Pa; again, this will not adversely effect the results or sensitivity of the tests. With experience,

© ISO 2004 – All rights reserved

Copyright International Organization for Standardization
Provided by IHS Markit under license with ANSI
No reproduction or networking permitted without license from IHS
Licensee=Becton Dickinson - Loc 1 - 61, 64/5984713001, User=Chiu, Shelly
Not for Resale, 10/14/2019 19:24:11 MDT

operators will be able to identify potential problems in a 10 s test period. Suspect gloves/gauntlets should be re-tested, and a longer test period may be required to confirm results.

f) Test all the gloves/gauntlets on fitting and prior to operating the separative device.

E.5.2.3 Results

E.5.2.3.1 Pass

If the glove/gauntlet is sound, then the reading shown on the manometer will remain static within ± 2 Pa to ± 10 Pa (or, better, ± 5 Pa).

E.5.2.3.2 Fail

If the glove/gauntlet is damaged, then the reading shown on the manometer will become increasingly negative (i.e. – 10 Pa, – 15 Pa, – 19 Pa). This trend will be distinct and progressive.

The rate of change will be proportional to the level of damage to the glove's integrity.

Any test showing probable damage should be repeated; this is easily done by releasing the pressure of the test unit against the glove port, which will allow the manometer to return to zero, and then reapplying pressure to start the retest. A damaged glove/gauntlet will create the same response pattern in each test, making confirmation an easy process.

E.5.2.4 Sensitivity

The test is proportionally sensitive to the decrease in internal operating pressure of the separative devices. Higher decrease in internal operating pressure provides more distinct test results, as shown in Equation (E.4). Therefore, doubling the decrease will nearly double the leak rate. For small pressure drops, the leak rate closely follows a linear equation.

E.5.3 Positive-pressure glove-leak tester

E.5.3.1 Overview

A positive-pressure leak-testing system requires a sealing cap to cover the glove/gauntlet aperture, which is fitted with two pipe fittings. One fitting is used to connect a sensitive valve for admitting and releasing the pressurizing gas. The second fitting is used to attach an electronic micromanometer.

This method should only be used before decontamination, and is not an in-process test.

E.5.3.2 Test procedure

When the sealing cap is placed over the glove-port ring, a space is formed between the cap and the inside surface of the glove. This space is then pressurised to 1 000 Pa and allowed to stabilise. A drop in this pressure will indicate a leak through the glove fabric or securing arrangement. The following steps should be followed.

a) Prior to commencement of test it is important to visually inspect the glove/gauntlets for any obvious damage.

b) Make sure all fingers on the glove extend into the separative device.

c) Connect the air line to the separative device.

d) Switch on the manometer.

--`,,,,`,,,,,`,`,`,,,,,``,`,`-`-`,,`,,`,`,,`---

© ISO 2004 – All rights reserved
Copyright International Organization for Standardization
Provided by IHS Markit under license with ANSI
No reproduction or networking permitted without license from IHS
Licensee=Becton Dickinson - Loc 1 - 61, 64/5984713001, User=Chiu, Shelly
Not for Resale, 10/14/2019 19:24:11 MDT

e) Adjust manometer to zero by pressing the “zeroing button” while holding the glove-leak tester in free space. Small variations of ± 3 Pa to ± 4 Pa from zero will not adversely affect the result or the sensitivity of the tests.

f) Fit the sealing cap of the glove-leak tester over the outer port ring of the glove to be tested.

g) Inflate the glove by operating the valve. The gauge of the manometer will display the pressure within the glove in pascals. The glove should be inflated to a minimum of 500 Pa and a maximum of 1 000 Pa; this may take a number of injections of air to reach the required pressure as the system stabilizes.

h) Observe the reading on the manometer. A stable reading will indicate a sound glove.

With experience, operators will be able to identify potential problems in a 10 s test period. Suspect gloves/gauntlets should be re-tested, and a longer test period may be required to confirm results.

E.5.3.3 Results

E.5.3.3.1 Pass

If the glove/gauntlet is sound, then the reading shown on the manometer will remain static within 2 Pa to 10 Pa, subject to the small variations noted in E.5.3.2.

E.5.3.3.2 Fail

If the glove/gauntlet is damaged, then the reading shown on the manometer will fall (i.e. 500 Pa, 495 Pa, 490 Pa). This trend will be distinct and progressive.

The rate of change will be proportional to the level of damage to the integrity of the glove.

Any test showing probable damage should be repeated.

Any tests that record a distinct change in pressure should be closely investigated and the fault (e.g. incorrectly positioned cuff ring, damaged glove) either re-tested or the suspect glove/gauntlet changed and a successful test conducted.

E.6 Example of leak tests for half-suits

E.6.1 Acceptance testing for equipment containing flexible half-suits may be undertaken using the oxygen method described in ISO 10648-2.

E.6.2 After quantitative acceptance results have be obtained, it may be worthwhile to undertake pressure tests for comparative routine testing, particularly to avoid compromising the integrity of the device by the use of negative-pressure testing.

© ISO 2004 – All rights reserved

Copyright International Organization for Standardization
Provided by IHS Markit under license with ANSI
No reproduction or networking permitted without license from IHS
Licensee=Becton Dickinson - Loc 1 - 61, 64/5984713001, User=Chiu, Shelly
Not for Resale, 10/14/2019 19:24:11 MDT

Annex F
(informative)

Parjo leak test method

F.1 Background

Parjo is the name given to a method for the leak rate assessment of separative devices operating at pressures close to atmospheric. The method was originated by and named after K. Parkinson and W. F. Jones. This test provides a (relatively) quick and versatile method of determining leak rates. It can be used on contaminated devices providing the pressure tapping is suitability protected, thus avoiding lengthy down times, as there are no intrusive test instruments.

The short duration of the test tends to reduce effects of changes in temperature and atmospheric pressure. It is a sensitive test for minor leaks [12].

F.2 Test for major leaks

F.2.1 General

Procedures for detection of major leak are provided in E.2.1 and should be undertaken on new equipment prior to using the Parjo leak test procedures.

F.2.2 Principle

The Parjo method uses a pressure-sensitive detergent film (meniscus) injected into a glass tube of known dimensions and a reference vessel of known volume. The method is capable of rapidly indicating a change of volume transmitted from the separative device to the reference vessel volume.

Assume that the scheme shown in Figure F.1 is practicable. With valves A and B open, the pressure in the separative device and reference vessels will soon reach equilibrium. Then, if the valves are closed, any change in separative-device pressure is reflected by a movement of the piston (meniscus) towards the lower pressure. This movement represents a volume change. This principle is applied by using the Parjo tube shown in Figure F.4 and installed as shown in Figure F.2 or F.3. The glass walls of the reference vessel will rapidly transmit radiant heat effects in the separative device. Reasonable precautions should be taken to prevent the separative device from picking up heat radiated from external sources. Piston (meniscus) deflections will then accurately represent changes in the separative-device atmosphere and can be calculated as volume changes. If observation of the meniscus deflections are kept short, e.g. no more than 5 min, temperature and barometric variations can be ignored.

© ISO 2004 – All rights reserved
Copyright International Organization for Standardization
Provided by IHS Markit under license with ANSI
No reproduction or networking permitted without license from IHS
Licensee=Becton Dickinson - Loc 1 - 61, 64/5984713001, User=Chiu, Shelly
Not for Resale, 10/14/2019 19:24:11 MDT

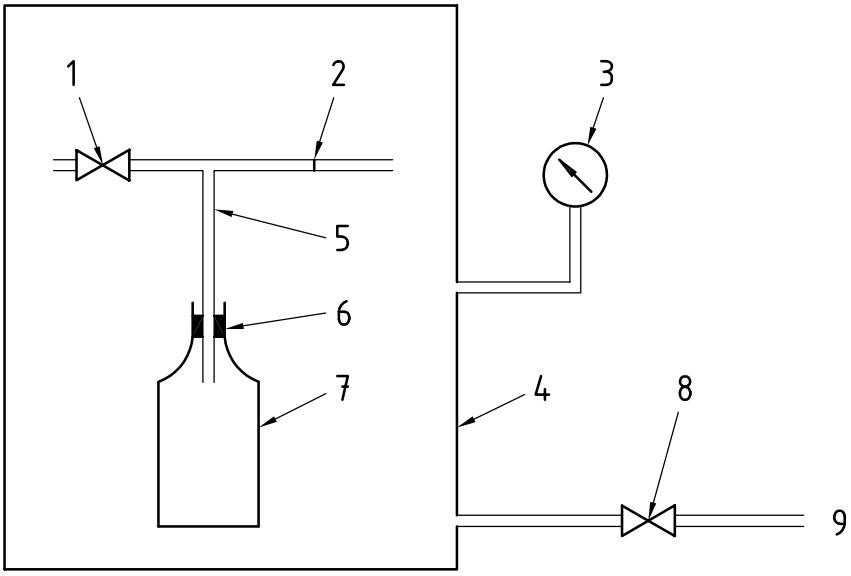

Key

1 valve A
2 frictionless piston
3 pressure gauge
4 separative device
5 glass tube
6 rubber bung
7 clear glass reference vessel of known volume
8 isolation valve B
9 to pressure/vacuum source

Figure F.1 — Schematic showing principle of operation

F.3 Equipment

F.3.1 General

The equipment needed to carry out the test is described in F.3.2. Only items of approved design can be used and should be set up as shown. To allow the method to be used at manufacturer, laboratory or production line installations, the test equipment should be capable of insertion into the device with the minimum of break in containment. The items approved for use can be inserted and assembled through a 152 mm-diameter glove port or penetration of similar size.

If the separative device does not allow insertion of the test equipment, then other arrangements should be considered (see F.3.3).

© ISO 2004 – All rights reserved

Copyright International Organization for Standardization
Provided by IHS Markit under license with ANSI
No reproduction or networking permitted without license from IHS
Licensee=Becton Dickinson - Loc 1 - 61, 64/5984713001, User=Chiu, Shelly
Not for Resale, 10/14/2019 19:24:11 MDT

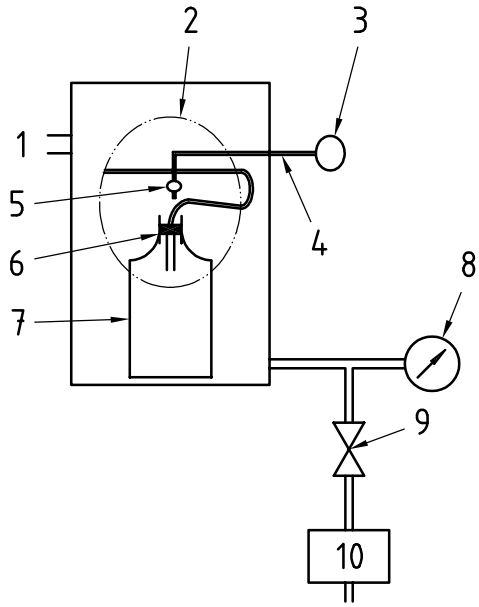

Key

1 connection of separative device to ductwork
2 viewing port
3 propipette
4 rubber tube
5 Parjo tube
6 rubber stopper
7 glass bottle
8 manometer/gauge
9 isolation valve
10 pressure/vacuum source

Figure F.2 — Typical separative device equipment layout

F.3.2 Equipment list

F.3.2.1 The following Items are approved for use:

a) Parjo tube Type A;

b) metric scale (clip on);

c) clips, spring;

d) stopper, rubber, bored to suit Parjo tube of diameter either 19 mm or 21 mm;

e) bottle, clear glass with a volume of 2 500 cm^3;

f) propipette rubber bulb with 3 valves.

F.3.2.2 Other items needed which are readily available:

a) rubber tubing (6 mm bore), as needed;

b) U-tube manometer or capsule gauge, to cover required range;

© ISO 2004 – All rights reserved
Copyright International Organization for Standardization
Provided by IHS Markit under license with ANSI
No reproduction or networking permitted without license from IHS
Licensee=Becton Dickinson - Loc 1 - 61, 64/5984713001, User=Chiu, Shelly
Not for Resale, 10/14/2019 19:24:11 MDT

c) stop watch or suitable timepiece;

d) needle valve to introduce controlled leak;

e) pressure/vacuum source;

f) isolation valve, e.g. diaphragm type (6 mm bore);

g) fittings to suit valve/ rubber hose, etc.;

h) bubble solution to form meniscus (see F.3.4).

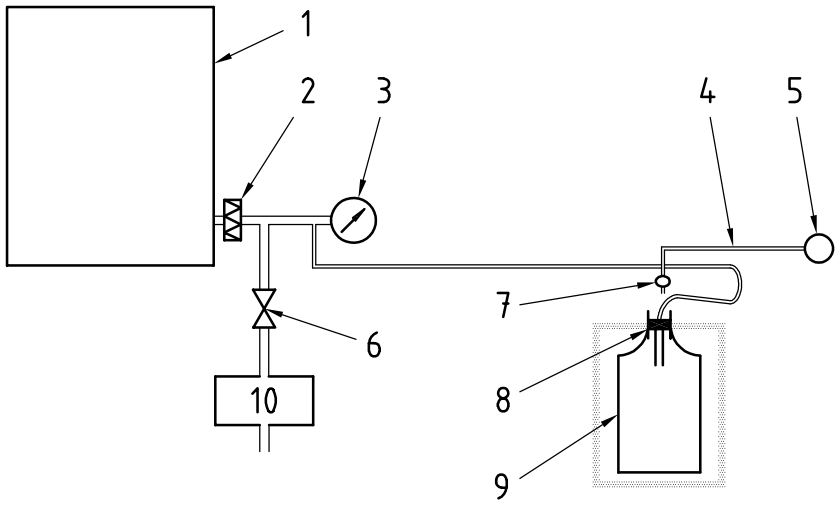

Key

1 separative device
2 optional HEPA filter
3 manometer/gauge
4 rubber tube
5 propipette
6 isolation valve
7 Parjo tube
8 rubber stopper
9 insulated glass bottle
10 pressure/vacuum source

Figure F.3 — Typical separative-device equipment layout with test equipment located external to device under test

F.3.3 Design requirements

To use the Parjo test method, a means of introducing the equipment into the separative device is required. The Parjo tube and scale should be clearly seen by the operator, although cold light (i.e. a hand-held, battery-powered electric light) can be used to illuminate the tube and scale. The separative device should also be fitted with a means of indicating the internal pressure, i.e. a mechanical gauge or U-tube manometer. Most separative devices have a number of penetrations of varying size. These penetrations can be readily adapted to provide a viewing window and access for the test equipment. Figures F.2 and F.3 show typical equipment layouts. Figure F.2 shows the test equipment within its own separative device, ready for connection to any system. The layout shown in Figure F.3 provides greater accessibility to the equipment. The test vessel shown in Figure F.3 should be insulated to minimise any variations in temperature. The use of in-line HEPA-filter-protected sample points allows this test procedure to be used on contaminated systems.

© ISO 2004 – All rights reserved

Copyright International Organization for Standardization
Provided by IHS Markit under license with ANSI
No reproduction or networking permitted without license from IHS
Licensee=Becton Dickinson - Loc 1 - 61, 64/5984713001, User=Chiu, Shelly
Not for Resale, 10/14/2019 19:24:11 MDT

If a separative device is leak-rate tested in accordance with the Parjo method, the drawings or the test schedule or both should be endorsed as shown:

a) Proof test.....Pa positive pressure

b) Maximum leak rate.....Percent volume/h negative *
Percent volume/h positive *

* Delete as necessary.

F.3.4 Equipment preparation

The Parjo tube (Figure F.4) is the cylinder for the “piston”. To ensure that the “piston” is as free as practicable to float, the Parjo tube should be thoroughly cleaned with a high-quality cleaning solution, rinsed with clean tap water and left in a damp state internally just before insertion into the bung of a glass reference vessel.

The glass vessel (bottle) shall be of known capacity (usually 2 500 cm^3 or 2 700 cm^3) and should be clean and dry. Any condensed moisture should be evaporated before use, or “gassing-off” may occur when testing is in progress. It is most important to use a clear glass bottle. Amber or other coloured bottles are not suitable.

A quantity (approximately 5 cm^3) of a soap solution is needed to produce “pistons” in the form of a film (bubble) of the solution. It should be made from a (50/50) % by volume, good quality, household liquid soap and clean tap water. Commercial detergents and cheaper quality liquids may leave residue in the Parjo tube that will cause drag and give spurious results. The better quality products have wetting agent additives. Alternatively, use liquid leak-detector solutions. To make observation easier, colorants (e.g. endorsing ink or a reputable penetrant dye) may be used very sparingly.

The rubber bung (19 mm) should be bored to allow a close fit of the Parjo tube through its axial centreline. The Parjo tube, when fitted to the rubber bung, should protrude slightly to allow observation of the tube end.

The test vessel in this configuration should be insulated to minimise any variations in temperature. The use of in-line, HEPA-filter-protected sample points allows this test procedure to be used on contaminated systems and also prevents any possible contamination from the test equipment.

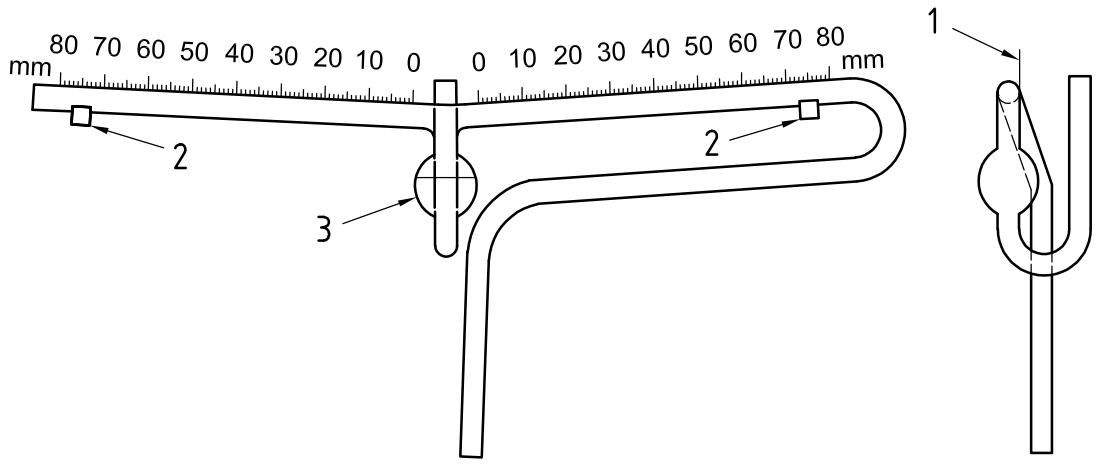

Key

1 scale

2 spring clip

3 liquid level when charging

Figure F.4 — Parjo tube type A

© ISO 2004 – All rights reserved
Copyright International Organization for Standardization
Provided by IHS Markit under license with ANSI
No reproduction or networking permitted without license from IHS
Licensee=Becton Dickinson - Loc 1 - 61, 64/5984713001, User=Chiu, Shelly
Not for Resale, 10/14/2019 19:24:11 MDT

The free end of the Parjo tube is connected to the device under test by the minimum length of flexible polyvinyl chloride (PVC) tubing.

In some cases, the leak rate may not be detectable. To prepare a valid test report, introduce a small acceptable leak by fitting a good quality needle valve into either the separative device or the test equipment, as convenient.

Separative devices are often light structures. Under test conditions, the apparent leak may vary due to the separative-device walls or windows. For example, separative-device plastic windows flex considerably under test. Variations in atmospheric pressure can produce a significant change in the separative-device volume. The effects of ambient temperature and pressure should be minimised, and any changes should be noted.

F.4 Procedure

F.4.1 Preparation of Parjo tube

Charge the Parjo tube with a bubble-producing solution to a level which half fills the spherically shaped reservoir (see Figure F.4). Clip the scale into position. Then connect the upper end of the U tube in which the reservoir is positioned via a rubber tube to the propipette described in F.4.3, which is positioned outside the separative device. Then pass the glass tube assembly through a rubber bung and insert the whole assembly in the reference-volume glass vessel.

With stable conditions and the separative device isolated and at test pressure, form a bubble by gently squeezing the rubber bulb or the propipette until a meniscus of the solution is positioned at the intersection of the two measuring areas of the glass tube. Release the bulb pressure slowly to allow the meniscus to remain in position. A light touch is required to perform this operation. It should be noted that the propipette has three glass ball-valves incorporated in the design, and the appropriate valve should be operated when introducing a bubble.

Observe the behaviour of the meniscus. If a pressure rise occurs during a negative-pressure test, the meniscus will deflect along the arm towards the reference vessel. If a pressure rise occurs during a positive-pressure test, the meniscus will deflect away from the reference vessel.

F.4.2 Leak-rate test procedure

A leak-rate test should be performed on each separative device, with the atmosphere within the separative device at positive pressure followed by a similar test at negative pressure. Set up test equipment as shown and proceed as follows.

a) Thoroughly clean all items to be placed in the separative device. Ensure that the Parjo tube has been thoroughly cleaned and wetted as described in F.3.4. Charge solution reservoir with sufficient solution to allow adequate stock. Position reference vessel and Parjo tube to allow good reading visibility through a viewing panel.

b) Seal the separative device and, using suitable equipment, reduce or pressurise the atmosphere as required by the test in progress. The test pressure shall be either + 1 000 Pa or as stated on the drawings or contract.

c) Allow approximately 30 min for all the equipment to reach the same temperature.

d) Inject a bubble into the Parjo tube by very gently squeezing the propipette bulb as described in F.4.2 until a meniscus of the detergent solution is positioned at the intersection of the two measuring arms of the tube. Release the bulb pressure slowly to allow the meniscus to remain in position.

   — If the separative-device atmosphere is at negative pressure and the device is not pressure-tight, the bubble will travel along the inclined arm of the Parjo tube towards the reference vessel.

© ISO 2004 – All rights reserved

Copyright International Organization for Standardization
Provided by IHS Markit under license with ANSI
No reproduction or networking permitted without license from IHS
Licensee=Becton Dickinson - Loc 1 - 61, 64/5984713001, User=Chiu, Shelly
Not for Resale, 10/14/2019 19:24:11 MDT

— If the separative-device atmosphere is at positive pressure and the device is not pressure-tight, the bubble will travel along the arm of the Parjo tube towards the outlet to the separative-device atmosphere.

e) When the bubble has formed a clear meniscus in the tube, start timing the travel of the meniscus and record deflection. When taking readings, ensure there are no secondary bubbles in the discharge to either the reference vessel or the separative device. Meniscus movements in the Parjo tube are influenced by the presence of secondary bubbles close to the tube ends in either the glass reference vessel or the separative device atmosphere. Ensure that all secondary bubbles are burst before taking deflection readings. A bubble close to either exit may be burst with the propipette.

f) Measure the deflection against a timed period of between 3 min to 5 min and record the results.

If there is no detectable deflection, introduce a small leak within acceptable limits by opening some convenient penetration or by means of a needle valve installed for the purpose. Proceed with test certification.

g) Use the F.5.4 example test certificate form to record results.

During a test, an approximate leak rate can be assessed in 2 min to 3 min. A rapid movement of the bubble indicates leaks greatly in excess of the allowable, and it may not be worth considering the test an official test. However if the equipment is used while searching for leaks, then it may indicate reductions in leak rate during rectification work.

Do not forget that the leak path may be unidirectional. This is particularly true of gasket-sealed blanking-off arrangements.

F.4.3 Using the propipette

The propipette is essentially a rubber bulb fitted with three glass ball-valves as shown in Figure F.5. To introduce a bubble into the centre of the Parjo tube measuring arms, use the following procedure.

a) Ensure that there is sufficient solution in the liquid reservoir.

b) Gently squeeze the bulb to create a little pressure using one hand.

c) With thumb and forefinger of the other hand very gently squeeze Valve A to allow the pressure to escape from the bulb to the Parjo tube while watching the effect on the bubble solution.

d) When a bubble has been formed, release hand pressure on Valve A and the bulb.

e) Press Valve R to ensure any remaining pressure in the bulb is released.

© ISO 2004 – All rights reserved
Copyright International Organization for Standardization
Provided by IHS Markit under license with ANSI
No reproduction or networking permitted without license from IHS
Licensee=Becton Dickinson - Loc 1 - 61, 64/5984713001, User=Chiu, Shelly
Not for Resale, 10/14/2019 19:24:11 MDT

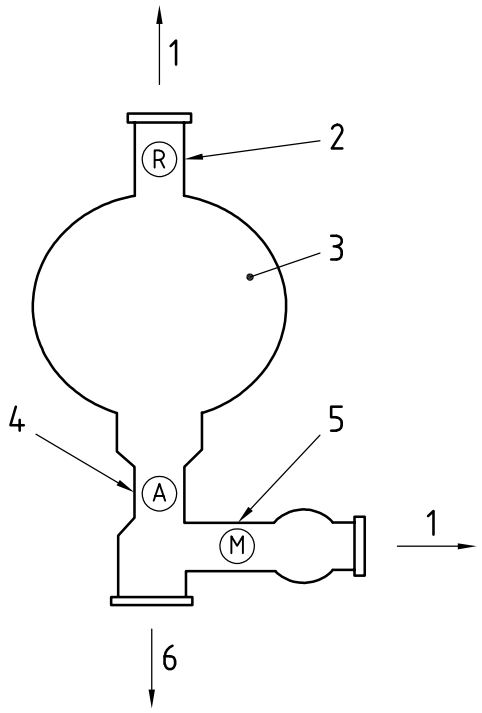

Key

1 to atmosphere
2 Valve R
3 bulb
4 Valve A
5 Valve M
6 to Parjo tube

NOTE Valves are normally closed.

Figure F.5 — Diagram of the propipette

F.5 Calculation of results

F.5.1 General

It is important that only approved equipment with known dimensions and values is used for this method. A basic method of calculation of the leak rate is given in F.5.2.

F.5.2 Formula

The hourly leak rate, R_h, is calculated from the formula:

$$R_h = \frac{A_P \times d}{V_r} \times \frac{60}{t} \qquad \text{(F.1)}$$

where

A_P is the cross-sectional area of the Parjo tube, in square centimetres;

d is the deflection of meniscus in the tube, in centimetres;

© ISO 2004 – All rights reserved

Copyright International Organization for Standardization
Provided by IHS Markit under license with ANSI
No reproduction or networking permitted without license from IHS
Licensee=Becton Dickinson - Loc 1 - 61, 64/5984713001, User=Chiu, Shelly
Not for Resale, 10/14/2019 19:24:11 MDT

V_r is the volume of the reference bottle, in cubic centimetres;

t is the time, in minutes.

The approved known reference volume, V_r, is a glass bottle of either 2 500 cm^3 or 2 700 cm^3 capacity.

The approved Parjo tube bore size is 4 mm, which gives an actual cross-section (A_P) of 0,126 cm^2 but for practical reasons use 0,127 cm^2. Hence a deflection d (cm) of the meniscus in the tube produces a volume change of $A_P \times d$ (cm^3).

F.5.3 Examples

0,8 cm deflection in 5 min with a 2 500 cm^3 glass bottle:

$$R_h = \frac{0{,}127 \times 0{,}8}{2\,500} \times \frac{60}{5} = 4{,}88 \times 10^{-4}\ \text{h}^{-1}$$

1,0 cm deflection in 5 min with a 2 700 cm^3 glass bottle:

$$R_h = \frac{0{,}127 \times 1}{2\,700} \times \frac{60}{5} = 5{,}64 \times 10^{-4}\ \text{h}^{-1}$$

1,5 cm deflection in 3 min with a 2 700 cm^3 glass bottle:

$$R_h = \frac{0{,}127 \times 1{,}5}{2\,700} \times \frac{60}{3} = 1{,}41 \times 10^{-3}\ \text{h}^{-1}$$

F.5.4 Test certification

F.5.4.1 General

Presentation of results is largely dependent on the type of equipment/volume under test and the allowable leak rate. F.3.2 gives the basic dimensions of the equipment and, provided that only approved equipment is used, it should allow the user to compile a test report to suit the requirements as scheduled in the contract or other relevant document.

F.4 gives the method of operation. If a detectable leak is present it will produce a deflection of the meniscus in the Parjo tube. However, the separative device may leak at a rate undetectable by this method when the observation period is kept within the recommended 5 min. This does not mean the separative device is leak-tight, and the test certificate should not state that the leak is undetectable.

If the separative device is leaking at a rate not detectable by this method, a controlled leak within the allowable limit should be introduced (F.4.2) by opening a valve installed for the purpose. After an acceptable meniscus deflection has been observed and recorded against time, the valve should be closed and the deflection should stop. The operation should be checked for repeatability. The test certificate may then state that the actual leak rate does not exceed the introduced leak and is thus acceptable. Table F.1 gives a guide to deflection and time values.

F.5.4.2 illustrates an example of a test certificate suitable for separative devices. It is advisable to take two or three readings when a leak is detected. If the trend indicated shows the leak is acceptable and consistent, then the average of three separate readings will allow a valid test report to be completed.

© ISO 2004 – All rights reserved
Copyright International Organization for Standardization
Provided by IHS Markit under license with ANSI
No reproduction or networking permitted without license from IHS
Licensee=Becton Dickinson - Loc 1 - 61, 64/5984713001, User=Chiu, Shelly
Not for Resale, 10/14/2019 19:24:11 MDT

F.5.4.2 Example of typical test certificate

Hourly leak rate test using Parjo tube method
Test certificate

Date of test.....Contract Number.....
Manufacturer .....
Location of test.....
Drawing Number .....
Separative device identification.....
Separative device proof test pressure ..... kPa positive
Separative device leak rate test pressure.....kPa negative
..... kPa positive
Maximum permissible hourly leak rate .....max.
Reference vessel volume..... cm^3
Time tests started.....Completed.....
(stable state achieved)

Test number	Test mode	Deflections in tube readings		Hourly leak rate
	+/–	in cm = d	in min = t	R_h

Use formula to obtain hourly leak rate

$$R_h = \frac{A_P \times d}{V_r} \times \frac{60}{t}$$

Ref. Vol. = V_r ..... cm^3
Tube cross-section = A_P ..... 0,127 cm^2
Observed deflection = d .....cm
Deflection time = t .....min

Average hourly leak rate .....
Test result * (Acceptable) As tested
(Not acceptable)

Signed .....
Witness.....

* Delete as necessary

Copyright International Organization for Standardization
Provided by IHS Markit under license with ANSI
No reproduction or networking permitted without license from IHS
Licensee=Becton Dickinson - Loc 1 - 61, 64/5984713001, User=Chiu, Shelly
Not for Resale, 10/14/2019 19:24:11 MDT

F.5.5 Hourly leak rate data

Table F.1 — Hourly leak rate (h^{-1}) data for a type A Parjo tube

Deflection cm	Observation time min				
	1	2	3	4	5
0,2	0,000 60	0,000 30	0,000 20	0,000 15	0,000 12
0,3	0,000 91	0,000 45	0,000 30	0,000 22	0,000 18
0,4	0,001 21	0,000 60	0,000 40	0,000 30	0,000 24
0,5	0,001 52	0,000 76	0,000 50	0,000 38	0,000 30
0,6	0,001 82	0,000 91	0,000 60	0,000 45	0,000 36
0,7	0,002 13	0,001 06	0,000 71	0,000 53	0,000 42
0,8	0,002 43	0,001 21	0,000 81	0,000 60	0,000 48
0,9	0,002 74	0,001 37	0,000 91	0,000 68	0,000 54
1,0	0,003 04	0,001 52	0,001 01	0,000 76	0,000 60
2,0	0,006 08	0,003 04	0,002 02	0,001 52	0,001 20
3,0	0,009 12	0,004 56	0,003 03	0,002 28	0,001 80
4,0	0,012 16	0,006 08	0,004 04	0,003 04	0,002 40
5,0	0,015 20	0,007 60	0,005 05	0,003 80	0,003 00
6,0	0,018 24	0,009 12	0,006 06	0,004 56	0,003 60
7,0	0,021 28	0,010 64	0,007 07	0,005 32	0,004 20
8,0	0,024 32	0,012 16	0,008 08	0,006 08	0,004 80
9,0	0,027 36	0,013 68	0,009 09	0,006 84	0,005 40

NOTE Approximate hourly leak rates using a 2 500 cm^3 reference vessel.

© ISO 2004 – All rights reserved
Copyright International Organization for Standardization
Provided by IHS Markit under license with ANSI
No reproduction or networking permitted without license from IHS
Licensee=Becton Dickinson - Loc 1 - 61, 64/5984713001, User=Chiu, Shelly
Not for Resale, 10/14/2019 19:24:11 MDT

Bibliography

[1] ISO 10648-1, *Containment enclosures — Part 1: Design principles*

[2] ISO 13408-1, *Aseptic processing of health care products — Part 1: General requirements*

[3] ISO 13408-5, *Aseptic processing of health care products — Part 5: Aseptic processing of solid medical devices*

[4] ISO 13408-6, *Aseptic processing of health care products — Part 6: Isolator/barrier technologies*

[5] ISO 14644-5, *Cleanrooms and associated controlled environments — Part 5: Operations* [2)]

[6] EN 12296, *Biotechnology — Equipment — Guidance on testing procedures for cleanability*

[7] EN 12298, *Biotechnology — Equipment — Guidance on testing procedures for leaktightness*

[8] EN 12307, *Biotechnology — Large-scale process and production — Guidance for good practice, procedures, training and control for personnel*

[9] EN 12469, *Biotechnology — Performance criteria for microbiological safety cabinets*

[10] ENV 1631, *Cleanroom technology — Design, construction and operation of cleanrooms and clean air devices*

[11] AECP 59, *Shielded and unshielded glove boxes for "hands on" operation*. United Kingdom Atomic Energy Authority (UKAEA) Harwell Laboratory, Oxfordshire, UK

[12] AECP 1062, *The Parjo method of leak rate testing low pressure containers*. United Kingdom Atomic Energy Authority (UKAEA) Harwell Laboratory, Oxfordshire, UK

[13] BS 3636, *Methods for proving the gas tightness of vacuum for pressurized plants*

[14] IEST-RP-CC0028:2002, *Minienvironments*. Institute of Environmental Sciences and Technology, Rolling Meadows, Illinois, USA

[15] NF 0137/1, *Leak testing, Code of practice for test requirements for low working pressure containers*. British Nuclear Fuels, plc, Technical Standards Group, Risley, UK

[16] SEMI E19-0697:1997, *Standard mechanical interface (SMIF).* SEMI, San Jose, California, USA

[17] SEMI E47.1-0303:2001, *Provisional mechanical standard for boxes and pods used to transport and store 300-mm wafers.* SEMI, San Jose, California, USA

[18] SEMI E45-1101:2001, *Test method for the determination of inorganic contamination from mini-environments using vapor phase decomposition/total reflection X-ray fluorescence spectroscopy (VPD-TXRF), VPD/inductively coupled plasma-mass spectrometry (VPD/ICP-MS)*. SEMI, San Jose, California, USA

[19] SEMI E46-95:1995, *Specification for the determination of organic contamination from mini-environments.* SEMI, San Jose, California, USA

2) To be published.

© ISO 2004 – All rights reserved

Copyright International Organization for Standardization
Provided by IHS Markit under license with ANSI
No reproduction or networking permitted without license from IHS
Licensee=Becton Dickinson - Loc 1 - 61, 64/5984713001, User=Chiu, Shelly
Not for Resale, 10/14/2019 19:24:11 MDT

[20] SEMI E62-0701:2001, *Provisional specification for 300-mm front-opening interface mechanical standard (FIMS).* SEMI, San Jose, California, USA

[21] SEMI S11-1296:1996, *Environmental, safety and health guidelines for semiconductor manufacturing equipment minienvironments*. SEMI, San Jose, California, USA

[22] TC 233/N229 DS:1995, *Safe biotechnology — Performance criteria for safety cabinets*. CEN, Brussels, Belgium

[23] *A guide to hazard and operability studies*. Chemical Industry and Health Council of the Chemical Industry Association, Publications Department,1977, London, UK

[24] COLES, T. *Isolation technology: A practical guide*. Interpharm Press, 1998, Buffalo Grove, Illinois, USA

[25] FULTON, S., BASS, E. and CHRISTAL, L. *I300I Factory Guideline Compliance: Factory Integration Maturity Assessment for 300 mm Production Equipment: Version 4.0*. International Sematech Technology Transfer # 98023468B-TR, March 31, 1999, Appendix G, Minienvironment Parametric Test Methods. International Sematech, 1999, Austin, Texas, USA

[26] *Isolators for pharmaceutical applications,* ISBN 0 11 701829 5. HMSO, 1994, London, UK

[27] SHERWOOD, E., HOPE, D., WHITMORE, J., OTTESEN, C. and DAVIS, C. *Integrated Minienvironment Design Best Practices*. International Sematech Technology Transfer # 99033693A, March 31, 1999, International Sematech, 1999, Austin, Texas, USA

[28] SIRCH, E.C. Isolatortechnik in der pharmazeutischen Industrie, in: *Reinraumtechnik*, Gail, L. and Hortag, H.P. (eds.), pp. 168-211, Springer Verlag, 2001, Berlin-Heidelberg-New York

[29] SIRCH, E.C. User requirements and design specifications of isolator containment for pharmaceutical production, in: *1998 Proceedings of the 44th Annual Technical Meeting of the IEST concurrent with the ICCCS 14th International Symposium on Contamination Control*, p. 343, Institute of Environmental Sciences and Technology, Phoenix, Arizona, USA

[30] TOLLIVER, D.L. (ed.). *Handbook of contamination control in microelectronics: principles, applications and technology*. Noyes Publications, 1988, Park Ridge, New Jersey, USA

[31] WAGNER, C.M. and AKERS, J.E. (eds.). *Isolator technology: applications in the pharmaceutical and biotechnology industries.* Interpharm Press, 1995, Buffalo Grove, Illinois, USA

© ISO 2004 – All rights reserved
Copyright International Organization for Standardization
Provided by IHS Markit under license with ANSI
No reproduction or networking permitted without license from IHS
Licensee=Becton Dickinson - Loc 1 - 61, 64/5984713001, User=Chiu, Shelly
Not for Resale, 10/14/2019 19:24:11 MDT

--``,,,,``,,,,,``,``,,,,,``,``,-`-`,,`,,`,`,,`---

Copyright International Organization for Standardization
Provided by IHS Markit under license with ANSI
No reproduction or networking permitted without license from IHS

Licensee=Becton Dickinson - Loc 1 - 61, 64/5984713001, User=Chiu, Shelly
Not for Resale, 10/14/2019 19:24:11 MDT

ICS 13.040.35

Price based on 52 pages

© ISO 2004 – All rights reserved

Copyright International Organization for Standardization
Provided by IHS Markit under license with ANSI
No reproduction or networking permitted without license from IHS

Licensee=Becton Dickinson - Loc 1 - 61, 64/5984713001, User=Chiu, Shelly
Not for Resale, 10/14/2019 19:24:11 MDT